OSHAcademy™
Occupational Safety & Health Training

Cranes and Derricks Safety I

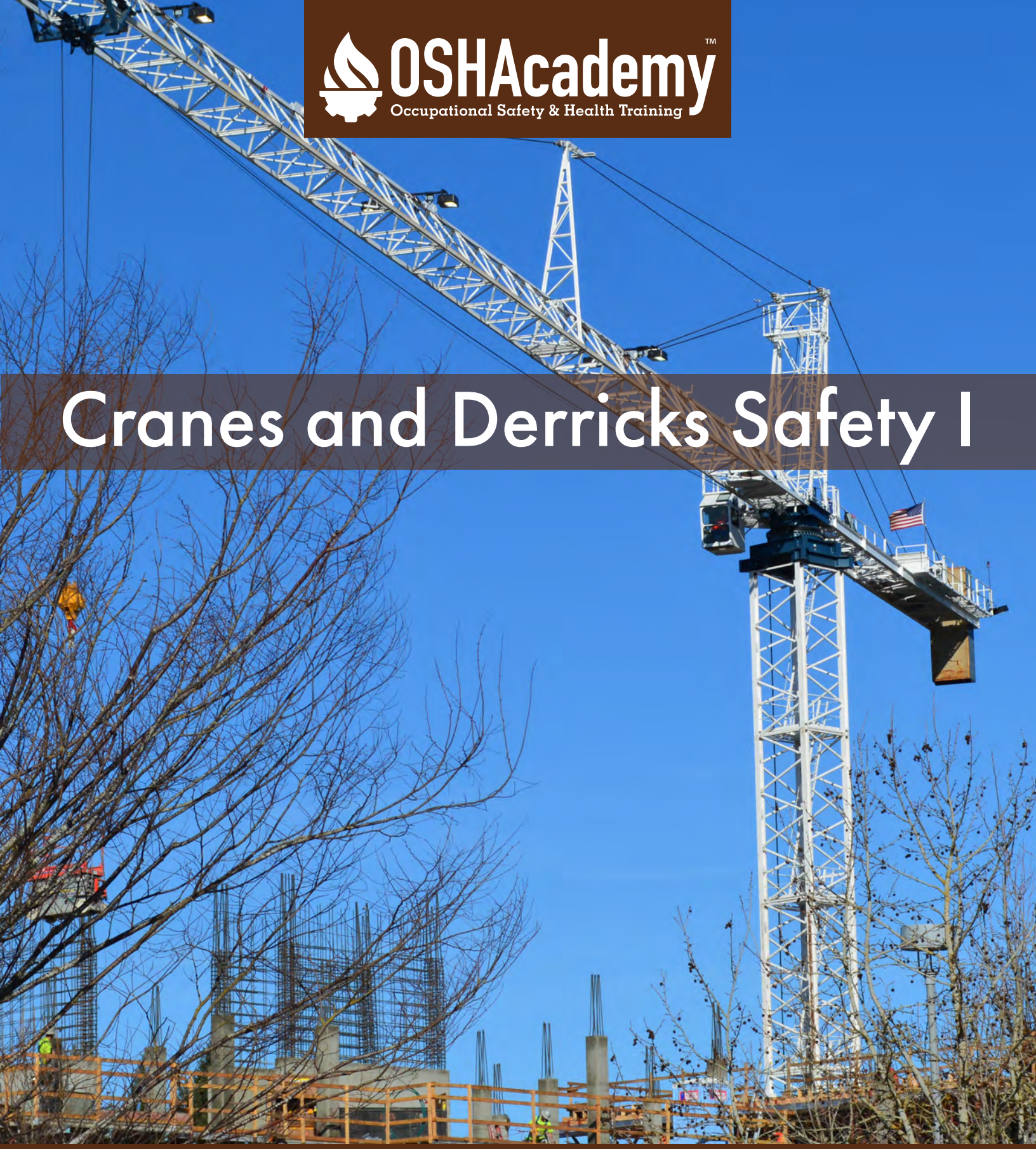

This course is intended to help businesses comply with OSHA's standard 29 CFR 1926 Subpart CC, Cranes & Derricks in Construction. It is the first of two courses. It is designed to address the most common compliance issues that employers will face and to provide sufficient detail to serve as a useful compliance course.

This page intentionally blank

OSHAcademy Course 820 Study Guide

Crane and Derrick Safety I

Copyright © 2022 Geigle Safety Group, Inc.

No portion of this text may be reprinted for other than personal use. Any commercial use of this document is strictly forbidden.

Contact OSHAcademy to arrange for use as a training document.

This study guide is designed to be reviewed off-line as a tool for preparation to successfully complete OSHAcademy Course 820.

Read each module, answer the quiz questions, and submit the quiz questions online through the course webpage. You can print the post-quiz response screen which will contain the correct answers to the questions.

The final exam will consist of questions developed from the course content and module quizzes.

We hope you enjoy the course and if you have any questions, feel free to email or call:

OSHAcademy

15220 NW Greenbrier Parkway, Suite 230
Beaverton, Oregon 97006
www.oshatrain.org
instructor@oshatrain.org
+1 (888) 668-9079

Disclaimer

This document does not constitute legal advice. Consult with your own company counsel for advice on compliance with all applicable state and federal regulations. Neither Geigle Safety Group, Inc., nor any of its employees, subcontractors, consultants, committees, or other assignees make any warranty or representation, either express or implied, with respect to the accuracy, completeness, or usefulness of the information contained herein, or assume any liability or responsibility for any use, or the results of such use, of any information or process disclosed in this publication. GEIGLE SAFETY GROUP, INC., DISCLAIMS ALL OTHER WARRANTIES EXPRESS OR IMPLIED INCLUDING, WITHOUT LIMITATION, ANY WARRANTIES OF MERCHANTABILITY OR FITNESS FOR A PARTICULAR PURPOSE. Taking actions suggested in this document does not guarantee that an employer, employee, operator or contractor will be in compliance with applicable regulations. Ultimately every company is responsible for determining the applicability of the information in this document to its own operations. Each employer's safety management system will be different. Mapping safety and environmental management policies, procedures, or operations using this document does not guarantee compliance regulatory requirements.

Revised: March 22, 2022

This page intentionally blank

Contents

Course Introduction 1
Standard Compliance Requirements 1
Course Layout 1
Course Components 2
Module 1: Crane and Derrick Basics 3
Introduction 3
Cranes Types 3
Specialized Equipment 7
Covered Equipment Attachments 8
Equipment Used to Deliver Material 9
When Equipment is Covered 9
When Equipment is Not Covered 9
Excluded Equipment 10
Module 1 Quiz 11
Module 2: Employer and Employee Responsibilities 13
Controlling Employers 13
Responsibility of the Company Operating the Crane 13
Qualified Person 13
Competent Person 14
Crane Owners Operating Leased Cranes 15
Crane Owners Operating Leased Cranes 16
All Contractors and Crane Owners 17
Crane Owners Delivering Materials 17

General Contractors 17
Crane Operator Responsibilities 18
Maintenance and Repair Worker Qualifications 19
Module 2 Quiz 20
Module 3: Assembly and Disassembly 22
Importance of Ground Conditions 22
Responsibilities of the Controlling Entity 22
Responsibility of the Company Operating the Crane 23
Assembly and Disassembly 23
Required Procedures 23
The A/D Director 24
The Crew 25
The Rigger 26
Working Under the Boom, Jib or Other Components 26
Real World Example 26
Synthetic Slings 26
Outriggers and Stabilizers 26
Dismantling Booms and Jibs 27
Fall Protection 28
Module 3 Quiz 29
Module 4: Power Line Safety 31
Danger–High Voltage 31
Related Subdivision CC Requirements 31
Real-World Example 31

Establishing Work Zones 32
De-Energize and Grounding 33
Maintaining Required Minimum Clearance Distance 34
Dedicated Spotter 35
Operation Below Power Lines Generally Prohibited 35
Employee Training 36
Assembling a Crane Near a Power Line 37
Traveling Under or Near Power Lines (1926.1411) 38
Limited Exception to Mandatory Minimum Clearance 39
Determine an Absolute Minimum Clearance 40
Working Around Power Lines 43
Module 4 Quiz 44
Module 5: Inspections 46
Shift Inspections 46
Monthly Inspections 48
Documentation of Monthly Inspection 48
Annual/Comprehensive Inspections 48
Corrective Actions 51
Documentation 51
Post-Assembly Inspections 51
Severe Service Inspections 52
Inspection of Non-Regular Equipment 53
Inspection of Modified Equipment 53
Inspection of Repaired/Adjusted Equipment 53

Module 5 Quiz 54

Module 6: Wire Rope Inspection, Selection, and Installation 56

Severing Wire Rope 56

Electrical Contact with Power Lines 57

Defects Requiring Removal From Service or Severing 57

Defects Requiring Evaluation 58

Selection and Installation Criteria 59

OSHA 1926.1414 requires wire rope be used in accordance with the recommendations of the wire rope manufacturer, the equipment manufacturer, or a qualified person. It establishes a classification system for rotation resistant rope and specifies design factors for the different classes of such rope. 59

Wire rope is classified as either "standard rope" or "rotation resistant rope." Rotation resistant rope, in turn, can be constructed in various ways, and the standard lists three different "types" that vary in their construction. 59

Type I rotation resistant wire rope: This type of wire rope is constructed to have little or no tendency to rotate or, if guided, transmits little or no torque. It has at least 15 outer strands and comprises an assembly of at least three layers of strands laid helically over a center in two operations. The direction of lay of the outer strands is opposite to that of the underlying layer. 59

Type II rotation resistant wire rope: This type of wire rope constructed to have significant resistance to rotation. It has at least ten outer strands and comprises an assembly of two or more layers of strands laid helically over a center in two or three operations. The direction of lay of the outer strands is opposite to that of the underlying layer. 59

Type III rotation resistant wire rope: This type of wire rope is constructed to have limited resistance to rotation. It has no more than nine outer strands and comprises an assembly of two layers of strands laid helically over a center in two operations. The direction of lay of the outer strands is opposite to that of the underlying layer. 59

For all three types of rotation resistant ropes, internal design resists twisting better than standard rope. Rotation resistant rope, therefore, enables better control of the load because it tends to keep the load from rotating while it is being hoisted or suspended. However, the design of rotation resistant rope makes it more susceptible to internal damage than standard

rope, and such internal damage can be hard to detect. Because of the chance of hidden damage, this section restricts the use of rotation resistant rope for boom hoist reeving and duty cycle/repetitive lifts. 59

Boom Hoist Reeving 59

Safety Devices and Operational Aids 61

Safety Devices 61

Safety Devices 62

Operational Aids 62

Category I Operational Aids 63

Category II Operational Aids 63

Category II Operational Aids 64

Module 6 Quiz 66

Glossary 68

Endnotes 78

Course Introduction

Employers who operate cranes on a construction site are responsible for complying with all aspects of the 29 CFR 1926, Subpart CC, Cranes & Derricks in Construction standard, but other employers whose personnel work at the site have responsibilities as well. These employer duties are consistent with OSHA's multi-employer policy, which imposes compliance duties on employers

- who create hazards (creating employers),
- who correct hazards (correcting employers),
- who expose employees to hazards (exposing employers), and
- who have general supervisory authority over a worksite (controlling employers).

This course is intended to help businesses comply with OSHA's standard 29 CFR 1926 Subpart CC – Cranes & Derricks in Construction. It is designed to address the most common compliance issues that employers will face and to provide sufficient detail to serve as a useful compliance course. It does not, however, describe all provisions of the standard or alter the compliance responsibilities set forth in the standard. The student must refer to the standard itself, which is available on OSHA's website and in the *Federal Register* to determine all of the steps that must be taken to comply with the standard.

Standard Compliance Requirements

Employers who have compliance responsibilities under the standard should take this course. In addition, crane operators and other workers who work with or near cranes on construction sites can find information in this course that will make them aware of the hazards cranes present and the steps employers must take to protect against those hazards.

Course Layout

This course is divided into modules that correspond to the sections of the standard. The course focuses on the standard's provisions that address the most serious hazards and the compliance issues employers will face most frequently. Hazards that arise less frequently are addressed briefly or not at all. In some places, the course refers the reader to sections of the standard for more detailed information about particular topics.

Copyright © 2022 Geigle Safety Group, Inc.

When this course uses the word "you," it is referring to an employer who operates a crane on a construction site unless the context indicates otherwise. However, as noted above, other employers may also have responsibilities under the standard.

Course Components

When you complete this course, you will have the knowledge of the following components:

- employer responsibilities
- covered and excluded equipment in the standard
- importance of ground conditions
- responsibility of the company operating the crane
- assembly and disassembly
- synthetic slings
- employee training

Copyright © 2022 Geigle Safety Group, Inc.

Module 1: Crane and Derrick Basics

Introduction

Moving large, heavy loads is crucial to today's manufacturing and construction industries. Much technology has been developed for these operations, including careful training and extensive workplace precautions. There are significant safety issues to be considered, both for the operators of the diverse "lifting" devices, and for workers in proximity to them. This course is a starting point for finding information about these devices and their operation.

OSHA’s standard applies to power-operated equipment used in construction work that can hoist, lower and horizontally move a suspended load, unless such equipment is specifically excluded from coverage.

Cranes Types

The types of cranes and derricks below are the most commonly used in construction and covered by OSHA’s crane standard.

Mobile Cranes

lifting devices incorporating a cable suspended latticed boom or hydraulic telescopic boom designed to be moved between operating locations by transport over the road. Mobile cranes include crawler mounted, wheel-mounted, rough terrain, all-terrain, commercial truck-mounted, and boom truck cranes.

Copyright © 2022 Geigle Safety Group, Inc.

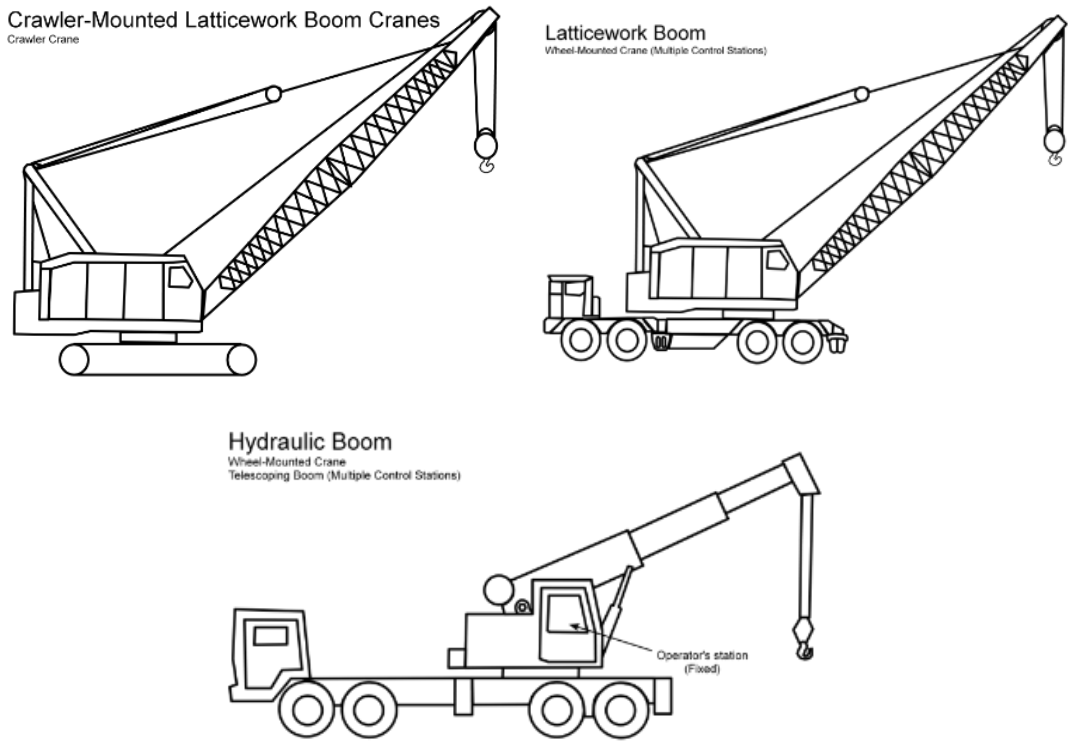

Tower Cranes

Tower cranes have lifting structures that use a vertical mast or tower to support a working boom (jib) in an elevated position. Loads are suspended from the working boom. While the working boom may be of the fixed type (horizontal or angled) or have luffing (raising or lowering the boom) capability, it can always rotate to swing loads, either by rotating on the top of the tower (top slewing) or by the rotation of the tower (bottom slewing). The tower base may be fixed in one location or ballasted and moveable between locations.

Tower cranes include:

- **Hammerhead Tower Cranes** - those with a fixed jib (hammerhead boom). They are the most common type used.

- **Self-Climbing Tower Cranes** - as a building outgrows the fixed crane tower, a new piece of tower slides upwards through the center of the tower and adds itself to the top of the crane. The crane will continue to grow vertically.

- **Derrick Tower Cranes** - those designed to operate atop roofs or fit into small spaces. They are commonly found on ships or at docking facilities.

Copyright © 2022 Geigle Safety Group, Inc.

- **Luffing Tower Cranes** - those with a luffing boom that can be recognized by its diagonal arm coming out of the tower. If they are more than 100 meters high, they must be tied (tethered) to a building structure.

- **Self-erecting Tower Cranes** - those with towers that erect autonomously. The use of self-erecting tower cranes is limited to a height of 100 meters above ground level.

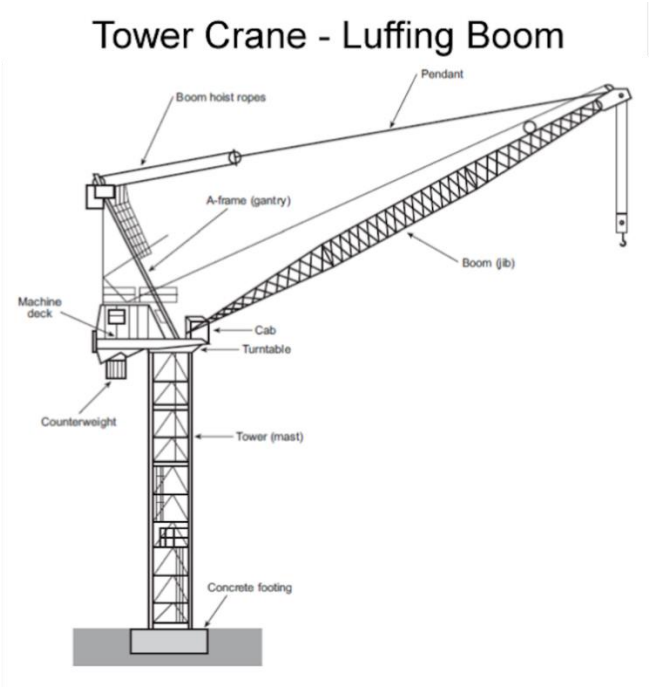

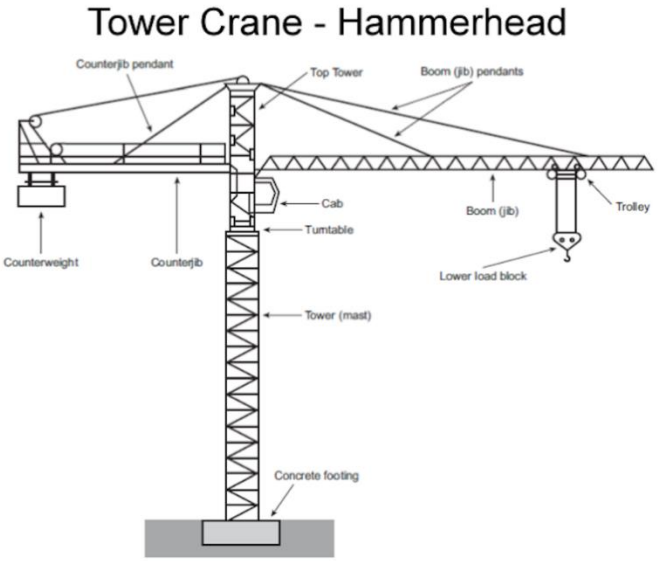

Copyright © 2022 Geigle Safety Group, Inc.

Articulating Cranes

Also known as knuckle-boom cranes and loader cranes. These are cranes whose boom consists of a series of folding, pin-connected structural members, typically manipulated to extend or retract by power from hydraulic cylinders. (See the next tab for rules that apply when such cranes are used to deliver material to a construction site.)

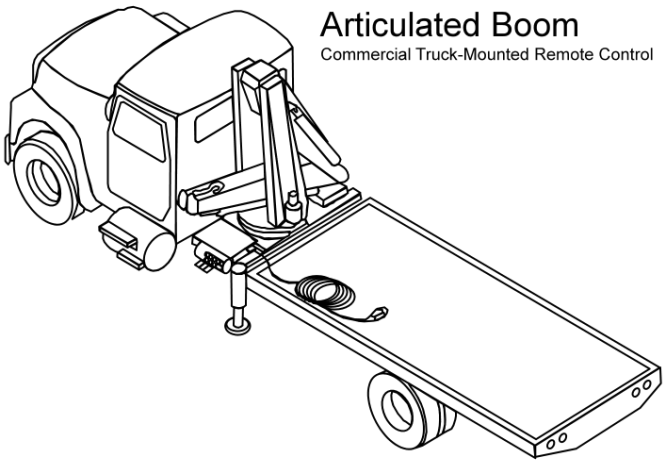

All Derricks

All derricks (except for gin poles used for the erection of communication towers have towers that don't actually bend but instead pivot at the base. The tower is usually made up of crisscrossing steel pipes and braces. This gives the crane a great deal of strength using very little structure. Four lines are connected to the tower; the crane tower can move in every direction because the lines are independent of one another. Hanging over the end of the tower is a single fifth line that has a hook or other attachment on the end. This fifth line moves up and down and attaches to loads.

Note: Despite their name, "digger derricks" are not considered "derricks" under the OSHA standard.

Copyright © 2022 Geigle Safety Group, Inc.

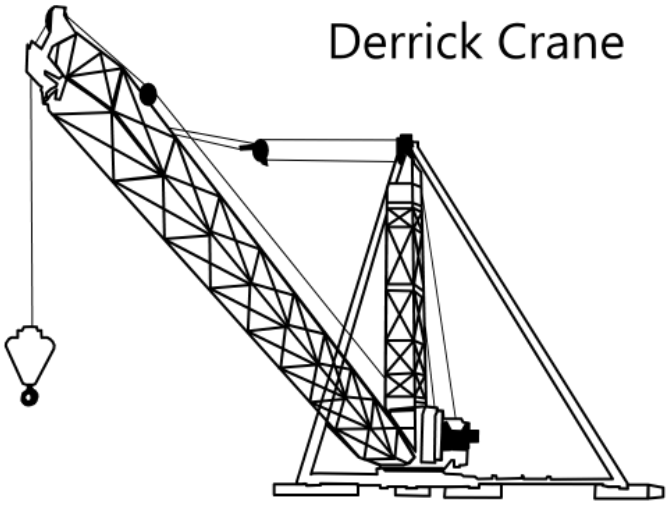

Specialized Equipment

The rule also applies to the following more specialized types of equipment when used in construction

Crane on a barge

- floating cranes
- cranes on barges
- locomotive cranes
- multi-purpose machines when configured to hoist, lower (by means of a winch or hook), and horizontally move a suspended load
- industrial cranes (such as carry-deck cranes)
- dedicated pile drivers
- service/mechanic trucks with a hoisting device
- monorail mounted cranes
- pedestal cranes
- portal cranes

Copyright © 2022 Geigle Safety Group, Inc.

- overhead and gantry cranes (except that such cranes that are permanently installed in a facility are subject to OSHA's general industry standard, 29 CFR 1910.179, even when used for construction work)
- straddle cranes
- sideboom cranes
- digger derricks (except when used for auguring holes for poles carrying electric and telecommunication lines, placing and removing the poles, and for handling associated materials to be installed on or removed from the poles)

Covered Equipment Attachments

OSHA 1926.1400 applies to equipment when used with attachments. Attachments are useful because they expand the range of tasks that can be done by the crane. Whether crane-attached or suspended attachments include:

- hooks
- magnets
- grapples
- clamshell buckets
- orange peel buckets
- concrete buckets
- drag lines
- personnel platforms
- augurs or drills
- pile driving equipment

Copyright © 2022 Geigle Safety Group, Inc.

Equipment Used to Deliver Material

It is common for material to be delivered to and unloaded on a construction site using a truck on which is mounted an articulating/knuckle-boom crane. This equipment may be covered by the standard when used in construction work. First let's discuss when delivery is not covered.

When an articulated crane delivers materials by placing them on the ground without arranging them in a particular sequence for hoisting, is the activity considered construction work?

When Equipment is Covered

When equipment delivers materials by placing them onto a structure, the activity is considered construction work and the delivery activity is covered by the OSHA standard.

Materials covered by the standard include:

- prefabricated components or building sections, such as roof trusses and wall panels; and
- structural steel members or components of a systems-engineered metal building.

When Equipment is Not Covered

Equipment is not covered by the standard when it delivers materials, regardless of the type, by placing them on the ground without arranging them for hoisting.

Equipment is not covered when it delivers materials by placing them onto a structure <u>if</u> all four of the following conditions are met:

1. the materials are sheet goods (such as sheet rock, plywood, or sheets of roofing shingles) or packaged goods (such as roofing shingles, bags of cement, or rolls of roofing felt);
2. the equipment uses a fork/cradle at the end of the boom to deliver the materials;
3. the equipment is not used to hold, support, or stabilize the material to facilitate a construction activity, such as holding material in place while it is attached to the structure; and

Copyright © 2022 Geigle Safety Group, Inc.

4. the equipment is equipped with a properly functioning automatic overload prevention device.

Excluded Equipment

OSHA 1926.1400 also covers the types of equipment are specifically excluded from coverage. Below is a partial list of excluded items:

- equipment that would otherwise be covered while it has been converted or adapted for a non-hoisting/lifting use (such conversions/adaptations include, but are not limited to, power shovels, excavators, and concrete pumps)
- power shovels, excavators, wheel loaders, backhoes, loader backhoes, and track loaders (this machinery is also excluded when used with chains, slings, or other rigging to lift suspended loads)
- automotive wreckers and tow trucks when used to clear wrecks and haul vehicles
- digger derricks when used for auguring holes for poles carrying electric and telecommunication lines, placing and removing the poles, and for handling associated materials to be installed on or removed from the poles (digger derricks used in such pole work must comply with either 29 CFR 1910.269 Electric Lines or 29 CFR 1910.268 Telecommunication Lines)
- machinery originally designed as vehicle-mounted aerial devices (for lifting personnel) and self-propelled elevating work platforms
- telescopic/hydraulic gantry systems
- stacker cranes
- powered industrial trucks (forklifts), except when configured to hoist and lower (by means of a winch or hook) and horizontally move a suspended load
- mechanic's truck with a hoisting device when used in activities related to equipment maintenance and repair
- machinery that hoists by using a come-a-long or chainfall
- dedicated drilling rigs
- gin poles when erecting of communication towers

Copyright © 2022 Geigle Safety Group, Inc.

- tree trimming and tree removal work
- anchor handling or dredge-related operations with a vessel or barge using an affixed A-frame
- roustabouts
- helicopter cranes

Module 1 Quiz

Use this quiz to self-check your understanding of the module content. You can also go online and take this quiz within the module. The online quiz provides the correct answer once submitted.

1. **Which of the following is covered by OSHA's crane standard?**

   a. Mobile cranes
   b. Power shovels
   c. Excavators
   d. Backhoes

2. **Which of the following is a type of crane and derrick that is most commonly used in construction?**

   a. Forklifts
   b. Stacker cranes
   c. Articulating cranes
   d. Straddle cranes

3. **Which of the following types of equipment are covered under OSHA's crane standard?**

   a. Power shovels
   b. Stacker cranes
   c. Dedicated drilling rigs
   d. Sideboom cranes

Copyright © 2022 Geigle Safety Group, Inc.

4. **When materials are delivered to the construction site by placing them on the _____, the activity is <u>not</u> considered construction work.**

   a. ground <u>without</u> arranging them in a particular sequence for hoisting
   b. ground <u>and</u> arranging them in a particular sequence for hoisting
   c. structure that is being built
   d. structure that is being built and the material is stabilized while it is attached to the structure

5. **When _____ are delivered to the construction site, the activity <u>is</u> considered construction work.**

   a. sheet rock
   b. sheet goods
   c. packaged goods
   d. prefabricated components

Copyright © 2022 Geigle Safety Group, Inc.

Module 2: Employer and Employee Responsibilities

Controlling Employers

The employer that is a prime contractor, general contractor, construction manager or any other legal entity which has the overall responsibility for the construction of the project (its planning, quality and completion) is considered the controlling employer, sometimes called the controlling entity.

- The controlling entity is responsible for seeing that the ground conditions are adequate to support the equipment.
- The controlling entity must also inform the user and the operator of the equipment of the location of hazards beneath the equipment set-up area (such as voids, tanks, utilities) if those hazards are identified in documents (such as site drawings, as-built drawings, and soil analyses) in the possession of the controlling entity (whether at the site or off-site) or of any other hazards known to the controlling entity.
- The controlling entity must also establish a system to coordinate the operations of two cranes that operate within each other's working radius.

Responsibility of the Company Operating the Crane

Although the controlling entity is responsible for providing adequate ground conditions, the company operating the crane will often be better able than the controlling entity to determine whether those conditions are adequate. If you are operating a crane and decide that ground conditions are inadequate, you **must** discuss the problem with the controlling entity and see that the problem is corrected before beginning or continuing operations.

Qualified Person

This is a person who has earned a recognized degree, certificate, or professional standing, or has extensive knowledge, training and experience. This is also a person that has successfully demonstrated the ability to solve/resolve problems relating to the subject matter, the work, or the project.

- Numerous duties must be carried out by a person who meets this definition. These include conducting annual/comprehensive inspections of all equipment as well as inspections of modified equipment.
- The assembly/disassembly (A/D) director must be a qualified person as well as a competent person.

Copyright © 2022 Geigle Safety Group, Inc.

- A qualified person also is responsible for duties under various provisions of the standard, including those dealing with developing assembly/disassembly procedures, wire rope safety, fall protection, maintenance and repair, hoisting personnel, multiple crane/derrick lifts, equipment modifications, tower cranes, derricks, and floating cranes/derricks.

Competent Person

This is the person who is capable of identifying existing and predictable hazards in the surroundings or working conditions which are unsanitary, hazardous, or dangerous to employees, and who has authorization to take prompt corrective measures to eliminate them.

In general, a qualified crane operator who has the authority to take corrective measures will be a competent person.

- A competent person must conduct shift and monthly inspections of all equipment.
- The A/D director must meet the test for a competent person.

In addition, duties under the sections of this standard governing Operations, Hoisting Personnel, Multiple Crane/Derrick Lifts, Derricks, and Floating Cranes must be carried out by competent persons. In general, a qualified crane operator who has the authority to take corrective measures will be a competent person.

Copyright © 2022 Geigle Safety Group, Inc.

Cranes and derricks in construction: key requirements		
Subdivision CC rule	**Competent person**	**Qualified person**
1926.1404 *Assembly/Disassembly, general requirements*	✓	✓
1926.1406 *Assembly/Disassembly, employer procedures*		✓
1926.1408 *Power line safety, equipment operations*		✓
1926.1409 *Power line safety over 350 kV*		✓
1926.1410 *Power line safety, equipment operations closer than Table A zone*		✓
1926.1412 *Inspections*	✓	✓
1926.1413 *Wire rope, inspection*	✓	✓
1926.1414 *Wire rope, selection and installation criteria*		✓
1926.1417 *Operation*	✓	✓
1926.1418 *Authority to stop operation*		✓
1926.1423 *Fall protection*	✓	
1926.1429 *Qualifications of maintenance and repair employees*		✓
1926.1430 *Training*	✓	✓
1926.1431 *Hoisting personnel*	✓	✓
1926.1432 *Multiple-crane/derrick lifts*	✓	✓
1926.1433 *Design, construction, and testing*		✓
1926.1435 *Tower cranes*	✓	✓
1926.1436 *Derricks*	✓	✓
1926.1437 *Floating cranes/derricks and land cranes/derricks on barges*	✓	✓
1926.1441 *Equipment with a rated hoisting/lifting capacity of 2,000 pounds or less*		✓

Crane Owners Operating Leased Cranes

If you are an employer operating a leased crane, you are responsible for complying with all requirements of the OSHA standard. Even if the lessor states that the crane meets the standard, you must take steps to verify that claim.

- One way to verify their claim is to ask the lessor for the most recent monthly and annual inspections reports, which will identify any problems found by the inspectors that either needed to be fixed or that need to be checked in future inspections.
- These documents must be made available to all persons who conduct inspections under the standard, including the shift inspections you must conduct while operating the crane.

Copyright © 2022 Geigle Safety Group, Inc.

- If the lessor cannot produce the required inspection documents, you will need to conduct a thorough inspection and document the results of that inspection before operating the crane.

Crane Owners Operating Leased Cranes

If you lease a crane to a contractor on the construction site, you must comply with all requirements of the OSHA crane standard because your employee, the operator, would be exposed to hazards resulting from the crane's operation.

Moreover, you are responsible for any violations caused by the crane operator because you are the operator's employer and the lessee is relying on the operator's knowledge and skills to ensure that operations are conducted safely.

If you do not provide an operator with the crane, but provide maintenance on the crane when needed, your maintenance person must be qualified and you are responsible for any hazards that result from the actions of your mechanic that expose other workers on the site to hazards. In addition, you are responsible for any violations to which your mechanic is exposed while he/she is working on the crane.

If you are contractor on a construction site and another contractor is using a crane on the site, yet none of your work involves the crane, you still have responsibilities because your employees may be exposed to hazards caused by the crane's operation. For example, if a crane collapses due to being overloaded, employees working elsewhere on the site can be killed or injured. And if, for example, a crane makes electrical contact with a power line, any employee touching or even near the crane can be electrocuted.

Even though you are not operating the crane, you must be aware of potential crane hazards and are responsible for protecting your employees against hazards you can reasonably foresee. You must take reasonable steps to protect your employees. For example, if you are concerned with a crane's stability due to potential overloading, unstable ground conditions, or high winds, you must satisfy yourself that the crane is stable before allowing your employees to work where they would be in danger if the crane collapses.

One way is to ask the company operating the crane or the controlling contractor on the site whether all necessary precautions are being taken to ensure the crane's stability. Also, you have a duty to train your employees in the hazards associated with their work, including those that might arise from working near a crane.

Copyright © 2022 Geigle Safety Group, Inc.

All Contractors and Crane Owners

All employers must train construction workers how to recognize and avoid the hazards associated with their work and, depending on the circumstances, may require training in topics not listed in the cranes and derricks standard.

All contractors and owners must provide training as appropriate to equipment operators, signal persons, competent and qualified persons, maintenance and repair workers, and workers who work near the equipment.

Where provisions of the crane standard direct an operator, crewmember, or other employee to take certain actions, you must establish, effectively communicate to the relevant persons, and enforce work rules to ensure compliance with such provisions.

Crane Owners Delivering Materials

If the owners of cranes that deliver sheet goods (such as drywall or plywood) or packaged goods (such as roofing shingles, bags of cement, or rolls of roofing felt) to a construction site using a flatbed truck equipped with an articulating crane and only places materials on the ground without arranging the materials in a particular order for hoisting, OSHA does not consider them engaged in construction work and they have no duties under the standard.

If equipment places materials onto the structure, OSHA considers the activity as construction work, and the standard applies to your work.

Refer to Module 1.7 for specific requirements for employers that deliver materials to the construction site.

General Contractors

If you are the general contractor on a project:

- You are responsible for seeing that the ground on which the crane will operate is sufficiently firm and level to enable the crane to operate safely.
- You must inform the crane operator of the location of hazards beneath the equipment set-up area (such as voids, tanks, utilities) if those hazards are identified in documents (such as site drawings, as-built drawings, or soil analyses) that are in your possession or the hazards are otherwise known to you.
- If there is more than one crane on the site and the working radii of the cranes overlap, you must establish a system to control their operations.

Copyright © 2022 Geigle Safety Group, Inc.

- As the controlling contractor on the site you have the same responsibility under this standard as you have under other OSHA standards: you must exercise reasonable care to prevent and detect violations on the site.

Crane Operator Responsibilities

Crane operators should be certified before they can operate a crane on their own. There are generally two options for certification:

1. certification by a nationally accredited crane operator testing organization
2. certification by an audited employer program

Crane operators' responsibilities include:

- Follow the manufacturer's procedures for operating the crane and the attachments.
- Keep the operator's manual and all procedures for operating the crane (such as load charts, recommended operating speeds, and hazard warnings) in the cab and readily available.
- Don't do anything distracting, such as texting or talking on a mobile phone, while operating the crane.
- Don't leave the controls while the load is suspended.
- Before starting the engine, verify that all controls are in the proper position and workers are in the clear.
- If crane adjustments or repairs are necessary, inform, in writing, the person responsible for receiving the information and the operator on the next shift.
- Don't operate a crane beyond its rated capacity.
- Don't use a crane to drag or pull loads sideways.
- Don't let the boom and any other parts of a crane contact an obstruction.
- Don't lift loads over the front area of wheel-mounted cranes unless the manufacturer permits it.
- When handling a load that is 90 percent or more of the maximum line pull, test the brakes by lifting the load a few inches and applying the brakes; repetitive lifts of such loads need to be tested only the first time.

Copyright © 2022 Geigle Safety Group, Inc.

- Don’t lower the load or the boom below the point where fewer than two full wraps of rope remain on their respective drums.
- Control the crane’s rotational speed so that the load doesn’t swing out beyond the radius.
- Use a tag line if necessary to prevent a load from turning excessively.
- Refuse to handle potentially hazardous loads. A crane operator concerned about hazards involving a crane can refuse to handle loads until a qualified person determines there isn’t a hazard or the hazard has been corrected.
- Stop a multiple-crane lift. The crane operator and the lift director have the authority to stop a multiple-crane lift if either determines the lift can’t be done according to the lift plan.

Maintenance and Repair Worker Qualifications

Maintenance and repair workers must meet the requirements for a qualified person regarding their maintenance and repair tasks. They are allowed to operate cranes to do maintenance work, to do an inspection, or to verify that the crane is working properly.

When operating a crane, they must be supervised by a qualified operator who meets the requirements of 1926.1427, and is familiar with the crane’s operation, characteristics, and hazards.

Maintenance and repair workers must not operate a crane during regular operations unless they are qualified under 1926.1427, Operator Qualification and Certification.

Copyright © 2022 Geigle Safety Group, Inc.

Module 2 Quiz

Use this quiz to self-check your understanding of the module content. You can also go online and take this quiz within the module. The online quiz provides the correct answer once submitted.

1. **If the employer leasing a crane cannot produce the required inspection documents verifying the crane meets the OSHA standard, the employer operating the crane must _____.**

   a. conduct and document an inspection of the crane
   b. report the violation to OSHA
   c. inform the general contractor about the requirement
   d. refuse to use the crane until the lessor performs an inspection

2. **As an employer, if you are not operating the crane on the project, you are required to be aware of _____.**

   a. unforeseeable crane hazards
   b. potential or foreseeable crane hazards
   c. none of the hazards
   d. both a and b

3. **Certain provisions of the standard direct <u>employees</u>, such as a crane operator, to take certain steps. What responsibility does an <u>employer</u> have under such provisions?**

   a. The employer must provide a warm and inviting worksite
   b. The employer must ensure employees are enforcing work rules amongst themselves
   c. The employer must enforce the work rules
   d. The employer must ensure a toolbox talk occurs every week

4. **If a subcontractor notifies the general contractor that a crane is being brought to the worksite, what is a responsibility of the <u>general</u> contractor?**

   a. Ensuring the ground on which the crane will operate is saturated and uneven
   b. Informing the subcontractor of the location of hazards beneath the equipment set-up area
   c. Asking the subcontractor for the most recent pre-shift inspections reports
   d. Informing the subcontractor of all safety committee meetings they must attend

Copyright © 2022 Geigle Safety Group, Inc.

5. **A(n) _____ is one who demonstrates the ability to solve/resolve problems relating to the subject matter, the work, or a project.**

   a. qualified person
   b. competent person
   c. designated person
   d. controlling person

Copyright © 2022 Geigle Safety Group, Inc.

Module 3: Assembly and Disassembly

Importance of Ground Conditions

Adequate ground conditions are essential for safe crane operations because the crane's capacity and stability depend on such conditions being present. If, for example, the ground is muddy or otherwise unstable, a crane could overturn even if operated with the load limits specified by the manufacturer.

Ground conditions are an important safety consideration when operating a crane.

BASIC RULE (short version): You must not assemble or use a crane, **unless** the equipment manufacturer's specifications for adequate support and degree of level of equipment are met.

BASIC RULE (long version): You must not assemble or use a crane **unless** ground conditions are firm, drained, and graded to a sufficient extent so that, in conjunction (if necessary) with the use of supporting materials (such as blocking, mats, cribbing, or marsh buggies (in marshes/wetlands), the equipment manufacturer's specifications for adequate support and degree of level of the equipment are met. The requirement for the ground to be drained does not apply to marshes/wetlands.

Responsibilities of the Controlling Entity

A contractor operating a crane on a construction site may not have the ability or authority to provide for adequate ground conditions at the site. The standard, therefore, places the responsibility for ensuring that the ground conditions are adequate on the "controlling entity" at the site. The "controlling entity" is the prime contractor, general contractor, construction manager, or other legal entity with overall responsibility for the project's planning, quality, and completion.

The controlling entity must also inform the user and operator of the equipment:

- of hazards beneath the equipment set-up area (voids, tanks, utilities)
- if those hazards are identified in documents (site drawings, as-built drawings, and soil analyses)
- if the documents are in the possession of the controlling entity (whether at the site or off-site)

Copyright © 2022 Geigle Safety Group, Inc.

- of any other hazards known to the controlling entity

If there is no controlling entity for the project, the responsibility for providing adequate ground conditions rests on the employer that has authority at the site to make or arrange for ground preparations.

Responsibility of the Company Operating the Crane

Although the controlling entity is responsible for providing adequate ground conditions, the company operating the crane will often be better able than the controlling entity to determine whether those conditions are adequate. If you are operating a crane and decide that ground conditions are inadequate, you **must** discuss the problem with the controlling entity and see that the problem is corrected before beginning or continuing operations.

Accidents during assembly and disassembly of lattice boom and tower cranes are one of the major causes of crane-related fatalities.

Assembly and Disassembly

Accidents during assembly and disassembly of lattice boom and tower cranes are one of the major causes of crane-related fatalities. These sections are designed to prevent such accidents by requiring safe assembly/disassembly procedures for lattice boom and tower cranes. Hydraulic-boom cranes are not generally assembled on-site, but these sections contain some provisions, such as the requirement (Standard 1404(q)) for proper setting of outriggers and stabilizers, which apply to cranes with hydraulic booms.

Required Procedures

When assembling or disassembling a crane, you must comply with either manufacturer or employer procedures, which must be developed by a qualified person.

Such procedures must, at a minimum:

- **prevent** unintended dangerous movement or collapse of any part of the equipment
- **provide** adequate support and stability of all parts of the equipment

Copyright © 2022 Geigle Safety Group, Inc.

- **position** employees involved in the assembly/disassembly operation so their exposure to unintended movement or collapse of part or all of the equipment is minimized

Regardless of which of these options you choose, you must follow any manufacturer prohibitions that apply to the assembly/disassembly operation.

The A/D Director

All assembly/disassembly operations must be directed by an individual who meets the criteria for both a competent person and a qualified person, or by a competent person who is assisted by one or more qualified persons. The A/D director must understand the applicable assembly/disassembly procedures. The A/D director must take the following precautions to protect against potential hazards associated with the operation.

The A/D director must understand the applicable assembly/disassembly procedures.

- Site and ground conditions must be able to support the equipment during assembly/disassembly.
- Blocking material must be the correct size, amount, and condition. The blocking must be stacked so as to sustain the loads and maintain stability.
- When used to support lattice booms or components, blocking must be placed appropriately to protect the structural integrity of the equipment, and prevent dangerous movement and collapse.
- When using an assist crane, the loads that will be imposed on the assist crane at each phase of assembly/disassembly must be verified as being within its rated capacity.
- The point(s) of attachment of rigging to a boom (or boom sections, jib, or jib sections) must be suitable for preventing structural damage and facilitating safe handling of these components.
- The center of gravity of the load must be identified if necessary for the method used for maintaining stability. Where there is insufficient information to accurately identify the center of gravity, measures designed to prevent unintended dangerous

Copyright © 2022 Geigle Safety Group, Inc.

movement, resulting from an inaccurate identification of the center of gravity, must be used.

- The boom sections, boom suspension systems (such as gantry A-frames and jib struts), and components must be rigged or supported to maintain stability upon the removal of the pins.
- Suspension ropes and pendants must not be allowed to catch on the boom or jib connection pins or cotter pins (including keepers and locking pins).
- Steps must be taken to prevent unintended movement from counterweights that are inadequately supported or are being hoisted.
- Each time reliance is to be placed on the boom hoist brake to prevent boom movement during assembly/disassembly, the brake must be tested prior to such reliance to determine if it is sufficient to prevent boom movement. If it is not sufficient, a boom hoist pawl, other locking device/back-up braking device, or another method of preventing dangerous movement of the boom (such as blocking or using an assist crane) from a boom hoist brake failure must be used.
- Backward stability must be assured before swinging the upperworks, travel, and when attaching or removing equipment components.
- The effect of wind speed and weather on the equipment must be taken into account.

The Crew

Before the operation begins, the A/D director must ensure that the crew members understand all of the following:

- their tasks
- the hazards associated with their tasks
- the hazardous positions/locations that they need to avoid

Before a crew member goes to a location that is out of view of the operator and is either in, on, or under the equipment, or near the equipment (or load) where the crew member could be injured by movement of the equipment (or load), the crew member must inform the operator that he/she is going to that location. Whenever the operator knows that a crew member is in such a potentially dangerous position, the operator must not move any part of the equipment

Copyright © 2022 Geigle Safety Group, Inc.

(or load) until the operator is informed in accord with a pre-arranged system of communication that the crew member is in a safe position.

The Rigger

When rigging is used for assembly/disassembly, the employer must ensure that the rigging work is done by a qualified rigger (i.e., a rigger who meets the definition of a qualified person).

Working Under the Boom, Jib or Other Components

When pins (or similar devices) are being removed, employees must not be under the boom, jib, or other components, unless site constraints require one or more employees to be in such a position. In such a case, the A/D director must implement procedures that minimize the risk of unintended dangerous movement and minimize the duration and extent of exposure under the boom.

Real World Example

A crew of ironworkers and a crane operator were unloading a 20-ton steel slab from a low-boy trailer using a 50-ton crawler crane with a 90-foot lattice boom. The operator was inexperienced on this crane and did not know the length of the boom. Further, no one had determined the load radius. During lifting, the load moved forward and to the right, placing a twisting force on the boom. The boom twisted under the load, swinging down, under and to the right. Two crew members standing 30 feet away apparently saw the boom begin to swing, and ran. The boom struck one of the ironworkers in the head, causing instant death. Wire rope struck a management-trainee and caused internal injuries. He died two hours later at a local hospital.

Synthetic Slings

When using synthetic slings during assembly or disassembly, you must follow the synthetic sling manufacturer's instructions, limitations, specifications and recommendations. Synthetic slings must be protected from abrasive, sharp or acute edges, and configurations that could cause a reduction of the sling's rated capacity, such as distortion or localized compression.

Outriggers and Stabilizers

When outriggers or stabilizers are used:

- The outriggers or stabilizers must be either fully extended or if manufacturer procedures permit, deployed as specified in the load chart.

Copyright © 2022 Geigle Safety Group, Inc.

- The outriggers must be set to remove the equipment weight from the wheels, except for locomotive cranes. This provision does not apply to stabilizers.
- When outrigger floats are used, they must be attached to the outriggers. When stabilizer floats are used, they must be attached to the stabilizers.
- Each outrigger or stabilizer must be visible to the operator or to a signal person during extension and setting.
- Outrigger and stabilizer blocking must be the correct size, amount, and condition. The blocking must be placed only under the outrigger or stabilizer float/pad of the jack or, where the outrigger or stabilizer is designed without a jack, under the outer bearing surface of the extended outrigger or stabilizer beam.

Dismantling Booms and Jibs

The following precautions must be taken to prevent dangerous movement of boom and jib sections that are being dismantled.

Outrigger and stabilizer blocking must be the correct size, amount, and condition.

- None of the pins in the pendants are to be removed (partly or completely) when the pendants are in tension.
- None of the pins (top or bottom) on boom sections located between the pendant attachment points and the crane/derrick body are to be removed (partly or completely) when the pendants are in tension.
- None of the pins (top or bottom) on boom sections located between the uppermost boom section and the crane/derrick body are to be removed (partly or completely) when the boom is being supported by the uppermost boom section resting on the ground (or other support).
- None of the top pins on boom sections located on the cantilevered portion of the boom being removed (the portion being removed ahead of the pendant attachment points) are to be removed (partly or completely) until the cantilevered section to be removed is fully supported.

Copyright © 2022 Geigle Safety Group, Inc.

Fall Protection

During assembly/disassembly work, fall protection is generally required when a worker is more than **15 feet** above an unprotected side or edge. See Standard 1423.

Copyright © 2022 Geigle Safety Group, Inc.

Module 3 Quiz

Use this quiz to self-check your understanding of the module content. You can also go online and take this quiz within the module. The online quiz provides the correct answer once submitted.

1. **Prior to assembly or use of a crane, you must ensure which of the following conditions have been met?**

    a. Ground conditions are saturated and uneven
    b. Blocks, mats, cribbing, or marsh buggies are being used as necessary
    c. The safety committee has pre-inspected and authorized work activity
    d. OSHA has pre-inspected and authorized work activity

2. **If there is no controlling entity for the project, the responsibility for providing adequate ground conditions rests on the employer that has authority at the site to _____.**

    a. make or arrange for ground preparations
    b. inform the user and operator of equipment hazards
    c. determine grounding requirements on wetlands
    d. proceed with work activity

3. **Employer procedures for assembling/disassembling cranes must include which of the following?**

    a. Provide documentation showing the safety committee has reviewed the plan
    b. Provide adequate support and stability of all parts of the equipment
    c. State review of the procedures
    d. Procure adequate personal protective equipment

4. **You must ensure all assembly/disassembly operations are directed by an individual who meets the criteria for _____.**

    a. a competent person or qualified person
    b. both a competent person and qualified person
    c. an authorized person or qualified person
    d. both a competent and authorized person

Copyright © 2022 Geigle Safety Group, Inc.

5. **Before the operation begins, the A/D director must ensure the crew members understand which of the following?**

    a. All of the controlling entities responsibilities
    b. The hazards associated with their tasks
    c. How to determine whether the crane has passed inspection
    d. The names and location of safety personnel on site

Copyright © 2022 Geigle Safety Group, Inc.

Module 4: Power Line Safety

Danger–High Voltage

Electrocutions caused by a crane, load, or load line contacting a power line have caused numerous fatalities. To prevent such accidents from occurring in the future, the standard contains detailed, systematic procedures that employers must follow when operating cranes near power lines.

These procedures are designed to:

1. prevent equipment from making electrical contact with power lines, and
2. protect workers in the event that such contact occurs.

NOTE: Special rules apply to work covered by 29 CFR, Subpart V, Power Transmission and Distribution. This course does not cover Subpart V work.

Related Subdivision CC Requirements

- 1926.1408 – Power line safety (up to 350 kV)-equipment operations
- 1926.1409 – Power line safety (over 350 kV)
- 1926.1410 – Power line safety (all voltages)-equipment operations closer than the Table A zone

Real-World Example

Two employees were attaching a crane lifting beam to the inside of a 10-foot-diameter precast concrete drywell section located at the front end of a flat-bed trailer. This trailer was parked under a 7600-volt overhead power line which was about 27 feet above the ground. The truck crane, a 30-year-old unit with a 35-foot boom, was located over 10 feet away from the power line. The crane's holding line was attached to the lifting beam. The closing and tag lines were attached to the clamshell bucket positioned on the ground. The crane operator swung his boom with the lifting beam toward the two men standing atop the concrete ring. Employee #2 was at the tractor end, and employee #1 was opposite him. Both were in contact with the lifting beam ends inside the concrete ring. When employee #2's arm got warm, he looked up and saw an arc. The crane operator swung the boom away from the power line. However, employee #1 fell back, electrocuted. The crane operator said the sun was in his eyes.

Copyright © 2022 Geigle Safety Group, Inc.

Establishing Work Zones

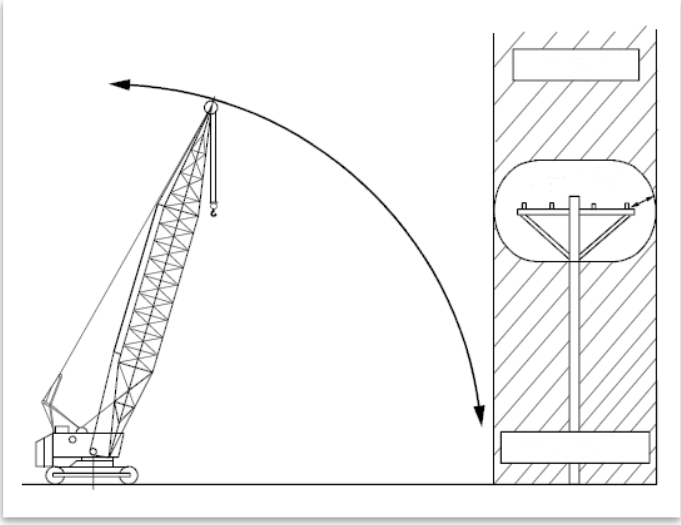

Keeping a safe distance from power lines is the key to preventing power line accidents. Therefore, the first step you must take when planning to operate a crane on a site where a power line is present is to identify the crane's work zone and use that work zone to determine how close it could come to the power line. If you determine that no part of the crane, load, or load line could get closer than 20 feet to a power line, no further precautions are required. If the initial plan for the crane's use changes during the project, you must reevaluate whether the equipment could get closer than 20 feet to the power line. **Note: If the line's voltage is more than 350,000 volts, a 50-foot, rather than 20-foot, minimum clearance must be maintained. This course assumes the voltage is less than 350,000 volts and uses the 20-foot clearance distance.**

There are two ways to identify the work zone and use it to determine whether the equipment could get closer than 20 feet to the power line. First, if the equipment (crane, load, load line, or rigging) could not get closer than 20 feet to the line even if the crane is operated at its maximum working radius, the 20-foot requirement is satisfied. Alternatively, you may establish a work zone by establishing boundaries (using flags or a device such as a range limit device or range control warning device) that are more than 20 feet from the power line and prohibiting the operator from operating the equipment past those boundaries.

Alternative to 20-Foot Clearance (Table A)

If you know the line’s voltage, you may use the minimum clearance distance in Table A below in lieu of 20 feet.

Table A-Minimum Clearance Distances	
Voltage (nominal, kV, alternating current)	Minimum clearance distance (feet)

Copyright © 2022 Geigle Safety Group, Inc.

up to 50	10
More than 50-200	15
More than 200-350	20
More than 350-500	25
More than 500-750	35
More than 750-1,000	45
More than 1,000	established by the utility owner and/or operator or registered professional engineer who is a qualified person

Note: The value that follows "to" is up to and includes the value. For example, more than 50 to 200 means up to and including 200kV.

One way to determine the line's voltage is to ask the line's owner or operator. The utility must respond to such a voltage inquiry within two working days.

If you use Table A to determine the minimum clearance distance, you must determine whether any part of the crane, load or load line could get closer than the Table A distance to a power line if the equipment is operated up to its maximum working radius in the work zone.

If you determine that part of the crane, load, or load line could come closer to the power line than the required minimum clearance distance (either 20 feet or the Table A clearance), you must either **de-energize and ground** the line or take specified steps to **maintain the required minimum clearance distance**. These options will now be discussed.

De-Energize and Grounding

De-energizing and visibly grounding the line will protect against electrocution and avoid the need for additional precautions. However, the employer must rely on the owner or operator of the power line's to take these steps. Utilities are generally unwilling to de-energize their lines

Copyright © 2022 Geigle Safety Group, Inc.

because doing so will cut off service to their customers. As a result, this precaution will usually not be available. **You must assume all power lines are energized unless the utility owner/operator confirms the power line has been, and continues to be, de-energized, and the line is visibly grounded at the worksite.**

Maintaining Required Minimum Clearance Distance

You must take **all of** the following steps.

- Conduct a planning meeting with the crane operator and the other workers who will be in the area of the equipment or load to review the location of the power line(s), and the steps that will be implemented to prevent encroachment/electrocution.
- If tag lines are used, they must be non-conductive.
- Erect and maintain an elevated warning line, barricade, or line of signs equipped with flags or similar high-visibility markings at the minimum clearance distance. If the operator cannot see the elevated warning line, a dedicated spotter must be used to signal the operator that the crane is passing the marked line.

In addition, you must use at least **one** of the following precautions:

- a dedicated spotter (a worker whose only duty is to observe the clearance between the equipment and the line) who is in continuous contact with the operator
- a proximity alarm set to give the operator sufficient warning to prevent encroachment
- a device that automatically warns the operator when to stop movement, such as a range control warning device (such a device must be set to give the operator sufficient warning to prevent encroachment)
- a device that automatically limits the crane's range of movement, set to prevent encroachment
- an insulating link/device installed between the end of the load line and the load

A spotter must be in continuous contact with the crane operator.

Copyright © 2022 Geigle Safety Group, Inc.

Dedicated Spotter

An employer should ensure a dedicated spotter meets the following:

- be equipped with a visual aid (a clearly visible line painted on the ground or a clearly visible line of stanchions) to assist in identifying the minimum clearance distance
- be positioned to effectively gauge the clearance distance
- where necessary, use equipment that enables the spotter to communicate directly with the operator
- give timely information to the operator so that the required clearance distance can be maintained
- be trained to be able to perform his/her duties effectively

Operation Below Power Lines Generally Prohibited

No part of the equipment, load line, or load (including rigging and lifting accessories) is allowed below a power line unless:

- The employer has confirmed that the utility owner/operator has de-energized and visibly grounded the power line at the worksite.
- The highest point of the equipment's boom, even if completely extended and vertical, will be more than the required minimum distance from the power line.

Copyright © 2022 Geigle Safety Group, Inc.

Diagram Identifying the Work Zone

The diagram below illustrates a simple solution related to power-line safety under 1926.1408.

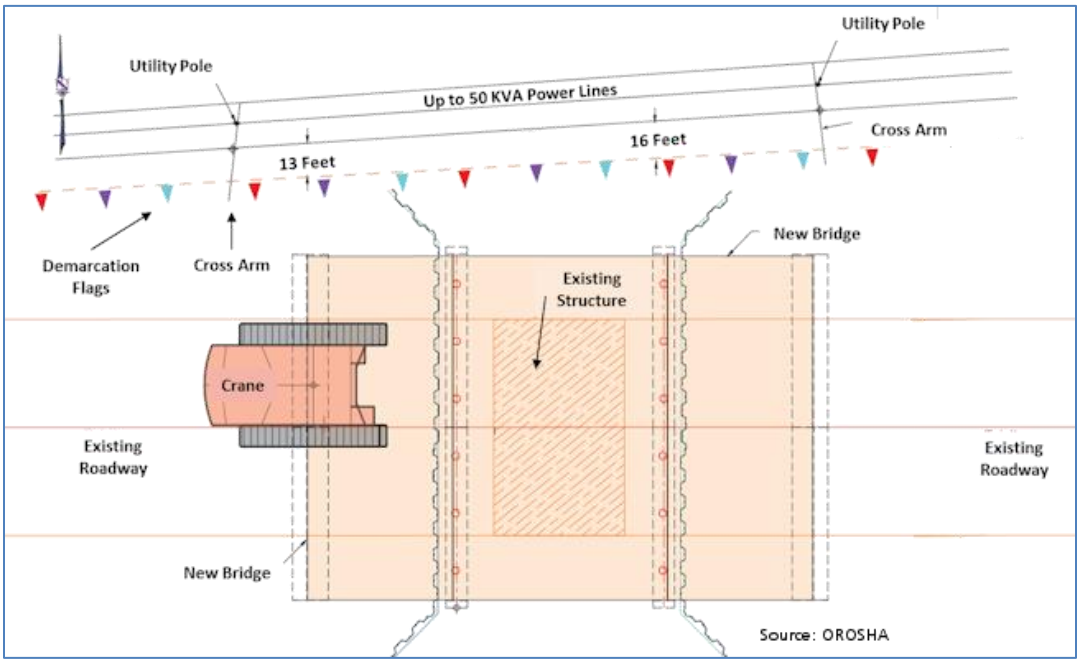

- The job is a bridge replacement on a two-lane road.
- Power lines were initially seven feet from the proposed work.
- The construction company contacted the power company and arranged to move the 12.5kV line (north) six feet making the minimum clearance 13 feet.
- At the same time, the power company agreed to install cross arms and hang a series of flags parallel to the power line.
- The flags hang from the utility pole at eye level to the operator establishing the crane's work zone.

The demarcation boundary, along with prohibiting the operator from going beyond the boundary, fulfills the requirements for power line safety in 1926.1408.

Employee Training

If the equipment contacts a power line, death or injury may be avoided if the workers in and on the crane know and understand the steps they can take to protect themselves. In general, the crane operator and any other person on the crane will be safe as long as they remain on the crane. The greatest danger is faced by a person who simultaneously touches both the crane and the ground, but a person who is near, but not touching, the crane can also suffer electric shock.

Copyright © 2022 Geigle Safety Group, Inc.

To ensure employees have the information they need to protect themselves, you must train each operator and crew member assigned to work with the equipment on how to avoid electrocution in the event the equipment contacts a power line. Such training must include:

- information regarding the danger of electrocution if a person simultaneously touches the equipment and the ground
- the importance to the operator's safety of remaining inside the cab, except where there is an imminent danger of fire, explosion, or other emergency that necessitates leaving the cab
- the safest means of evacuating from equipment that may be energized
- the danger of the potentially energized zone around the equipment (step potential)
- the need for crew in the area to avoid approaching or touching the equipment and the load
- safe clearance distance from power lines
- the limitations of an insulating link/device, proximity alarm, and range control (and similar) device, if used
- how to properly ground equipment and the limitations of grounding

Assembling a Crane Near a Power Line

The precautions described above for crane operations must also be taken when assembling or disassembling a crane near a power line. Under no circumstances may a crane be assembled or disassembled beneath an energized power line.

Copyright © 2022 Geigle Safety Group, Inc.

Traveling Under or Near Power Lines (1926.1411)

A crane traveling with a load must comply with the minimum clearance distance and associated precautions listed above.

The boom on this crane must be lowered to comply with the clearance distance.

If a crane travels under or near a power line on a construction site with no load, you must ensure:

- boom/mast and boom/mast support system are lowered sufficiently to meet the clearance distances below in Table T
- clearance distances in Table T are maintained while the crane is moving under the line
- power lines are illuminated or identified at night or when visibility is poor
- a safe path of travel is identified and used at night or when visibility is poor

Copyright © 2022 Geigle Safety Group, Inc.

If the crane is traveling with no load, the following clearance distances must be maintained

Table T-Minimum Clearance Distances While Traveling With No Load	
Voltage (nominal, kV, alternating current)	**While Traveling – Min. Clearance Distance (ft.)**
up to 0.75	4
More than .75 to 50	6
More than 50 to 345	10
More than 345 to 750	16
More than 750 to 1,000	20
More than 1,000	determined by the utility owner or registered professional engineer who is a qualified person with respect to electrical power transmission and distribution

In determining whether the equipment will maintain the required clearance distance, you must take into account the effects of speed and terrain on the equipment's movement (including movement of the boom/mast). In addition, if any part of the equipment can get closer than 20 feet to the line, you must use a dedicated spotter to observe the clearance and signal the operator in order to keep the required minimum clearance.

Limited Exception to Mandatory Minimum Clearance

In some circumstances, it is impossible to perform a required lift while staying the required minimum distance from a power line. The standard provides a limited exception for such circumstances that allow operations closer than the minimum distance. However, it requires additional precautions due to the extreme danger of operating so close to a power line.

Before using this exception, you must determine that specific work required to complete the project cannot be performed while maintaining the Table A clearance.

Copyright © 2022 Geigle Safety Group, Inc.

In making this determination, you must consider whether an alternative method of performing the lift, such as repositioning the crane or the load, will enable you to maintain the required minimum distance. If you have decided that it is necessary to operate closer than the required minimum distance, you must consult the utility that owns or operates the line to determine whether it is feasible to de-energize and ground or relocate the line.

Only if de-energizing/grounding or relocation is not feasible, may you operate closer to an energized line than the minimum distance given in Table A. In such a case, you must take the following precautions to protect workers.

Determine an Absolute Minimum Clearance

You must have the power line owner/operator or a registered professional engineer who is a qualified person with respect to electrical power transmission and distribution determine the minimum clearance distance that must be maintained to prevent electrical contact in light of the on-site conditions.

If you operate closer than the required minimum distance, you must consult the utility company to determine if it is feasible to de-energize and ground or relocate the line.

The factors that must be considered in making this determination include, but are not limited to:

- conditions affecting atmospheric conductivity
- time necessary to bring the equipment, load line, and load (including rigging and lifting accessories) to a complete stop
- wind conditions
- degree of sway in the power line
- lighting conditions
- other conditions affecting the ability to prevent electrical contact

Hold a Planning Meeting

You must hold a planning meeting with the utility owner/operator (or registered professional engineer who is a qualified person with respect to electrical power transmission and distribution) to determine the procedures to prevent electrical contact and electrocution.

Copyright © 2022 Geigle Safety Group, Inc.

Use Protective Procedures

The procedures required by the standard and any additional procedures developed at the planning meeting must be followed. The following procedures are required by the standard and **must be followed without exception:**

- If the power line is equipped with a device that automatically re-energizes the circuit in the event of a power line contact, before the work begins, the automatic reclosing feature of the circuit interrupting device must be made inoperative if the design of the device permits.

- A dedicated spotter who is in continuous contact with the operator must be used to ensure the equipment does not breach the minimum clearance. The requirements for a dedicated spotter are discussed above.

- An elevated warning line, or barricade (not attached to the crane), in view of the operator (either directly or through video equipment), equipped with flags or similar high-visibility markings, must be erected.

An elevated warning line, or barricade, in view of the operator must be erected.

- An insulating link/device must be installed at a point between the end of the load line (or below) and the load. Note: certain safety procedures or devices may be substituted for a Nationally Recognized Testing Laboratory-approved insulating link during an interim period. Refer to Standard 1926.1410(d)(4)(iv) and (v) of the standard for details.

- All employees who may come in contact with the equipment, the load line, or the load (except operators located on the equipment) must be insulated or guarded by wearing insulating gloves rated for the voltage involved or using another effective means of insulating them from the equipment.

- Nonconductive rigging must be used.

- If the equipment is equipped with a device that automatically limits range of movement, it must be used and set to prevent any part of the equipment, load line, or load (including rigging and lifting accessories) from breaching the minimum approach distance.

Copyright © 2022 Geigle Safety Group, Inc.

- Any tag line must be of the non-conductive type.
- Barricades forming a perimeter at least 10 feet away from the equipment must be erected to prevent unauthorized personnel from entering the work area. In areas where obstacles prevent the barricade from being at least 10 feet away, the barricade must be as far from the equipment as feasible.
- Workers other than the operator must be prohibited from touching the load line above the insulating link/device and crane. The operator is excluded from this requirement because while, on the equipment, the operator is, in effect, touching the load line above the insulating link/device. However, if the operator is remotely operating the equipment from the ground, he/she must use either wireless controls that isolate the operator from the equipment or insulating mats that insulate the operator from the ground.
- Only personnel essential to the operation are permitted in the area of the crane and load.
- The equipment must be properly grounded.
- Insulating line hose or cover-up must be installed by the utility owner/operator except where such devices are unavailable for the line voltages involved.
- Each operator and crew member assigned to work with the equipment must be trained in the topics listed earlier in this section.

Appoint a Project Director

You, along with the utility owner/operator (or registered professional engineer) and all other employers involved in the work, must identify one person who will direct the implementation of the procedures. That person must have the authority to stop work at any time to ensure safety.

Reconsider Your Plan if a Problem Arises

The danger of operating a crane close to a power line cannot be overemphasized. Procedures that may appear adequate at the beginning of a job may not be adequate in practice. For example, if electricity arcs from the line to the equipment, whatever precautions are being taken is not sufficient. Therefore, if there is any indication the procedures being followed are inadequate to protect workers, you must safely stop operations and either develop new, more protective procedures or have the utility owner/operator de-energize and visibly ground or relocate the power line before resuming work.

Copyright © 2022 Geigle Safety Group, Inc.

Working Around Power Lines

Always	Never
• ALWAYS keep a safe distance of at least 10 feet between you and your equipment from the power lines. • ALWAYS survey the site for overhead power lines. LOOK UP! • ALWAYS, when using crane and/or equipment near energized power lines of 50,000 volts (50kV) or more, make sure the minimum distance between the lines and any part of the crane is 10 feet plus 4 inches for each 10kV over 50kV. • ALWAYS request an observer to assist you where it is difficult to maintain the desired clearance by visible means. • ALWAYS require that the only job of the observer is to help the operator maintain the safe clearance. • ALWAYS treat overhead power lines as if they were energized. • ALWAYS, when in doubt, call the electric company to find out what voltage is on the lines. • ALWAYS ask the electric company to either de-energize and ground the lines or install insulation while you are working near them. • ALWAYS make sure ladders and tools are non-conductive.	• NEVER get closer than 10 feet to an overhead power line! • NEVER work at a site without checking for power lines. LOOK UP! • NEVER, when using cranes and/or equipment near energized power lines of 50,000 volts (50kV) or more, get closer than 10 feet plus 4 inches for each 10kV over 50kV. • NEVER use cranes alone where it is difficult by visible means to maintain the desirable clearance. • NEVER forget that overhead power lines could be energized. • NEVER allow the observer to perform another job while helping the operator to maintain a safe clearance. • NEVER take a chance without consulting first with the electric company to find out what voltage the lines carry. • NEVER work near power lines until you are certain they have been de-energized and grounded or insulated by the electric company. • NEVER work with ladders and tools if they have not been rated nonconductive.

Copyright © 2022 Geigle Safety Group, Inc.

Module 4 Quiz

Use this quiz to self-check your understanding of the module content. You can also go online and take this quiz within the module. The online quiz provides the correct answer once submitted.

1. **What is the key to preventing power line accidents?**

   a. ensuring HV lines are de-energized prior to work
   b. adequate safety training
   c. keeping a safe distance from power lines
   d. visual observation by authorized spotters

2. **The first step you must take when planning to operate a crane on a site where a power line is present is to _____.**

   a. estimate rated capacity
   b. determine the work zone
   c. match the crane to the job
   d. review the safe work plan

3. **No further precautions are required if you determine that no part of the crane, load, or load line could get closer than _____ feet to a power line.**

   a. 5
   b. 10
   c. 15
   d. 20

4. **If you determine that part of the crane, load, or load line could come closer to the power line than the required minimum clearance distance, and you cannot maintain the required minimum distance, you must _____.**

   a. first request permission from the local utility to proceed
   b. move the power lines prior to the start of work activity
   c. de-energize and ground the power line
   d. use a more suitable crane

Copyright © 2022 Geigle Safety Group, Inc.

5. **A person who simultaneously touches both the crane and the ground faces the greatest danger; however a person who is _____ the crane can also suffer electric shock.**

   a. standing on
   b. near, but not touching
   c. <u>not</u> in the energized zone of
   d. a safe distance away from

Copyright © 2022 Geigle Safety Group, Inc.

Module 5: Inspections

The crane standard requires a variety of inspections to ensure equipment is in a safe condition. The following inspections are required of all equipment:

- shift inspections
- monthly inspections
- annual inspections
- shift, monthly, and annual wire rope inspections (if the equipment uses wire rope)

In addition, the following special inspections are required in particular circumstances:

- post-assembly inspections
- pre- and post-erection inspections of tower cranes (Standard 1435(f))
- equipment used in severe service
- equipment not in regular use
- inspections of certain modified equipment
- inspections of certain repaired/adjusted equipment

Sample Crane Checklist

Sample Inspection Checklist

Shift Inspections

A competent person must visually inspect the equipment each shift the equipment is used. Taking apart equipment components and booming down is not required as part of this inspection unless the results of the visual inspection or trial operation indicate that further investigation is needed. At a minimum, the inspection must include all of the following:

- control mechanisms for maladjustments interfering with proper operation
- control and drive mechanisms for apparent excessive wear of components and contamination by lubricants, water or other foreign matter
- air, hydraulic, and other pressurized lines for deterioration or leakage, particularly those which flex in normal operation

Copyright © 2022 Geigle Safety Group, Inc.

- hydraulic system for proper fluid level
- hooks and latches for deformation, cracks, excessive wear, or damage such as from chemicals or heat
- wire rope reeving for compliance with the manufacturer's specifications
- wire rope (see Standard 1413 for the rules for wire rope inspections)
- electrical apparatus for malfunctioning, signs of apparent excessive deterioration, or dirt or moisture accumulation
- tires (when in use) for proper inflation and condition
- ground conditions around the equipment for proper support, including ground settling under and around outriggers/stabilizers and supporting foundations, ground water accumulation, or similar conditions
- the equipment for level position within the tolerances specified by the equipment manufacturer's recommendations, both before each shift and after each move and setup
- operator cab windows for significant cracks, breaks, or other deficiencies that would hamper the operator's view
- rails, rail stops, rail clamps and supporting surfaces when the equipment travels on rails
- safety devices and operational aids for proper operation
- for derricks, guys for proper tension (Standard 1436(p))
- deficiencies identified during the most recent annual inspection that the inspector determined must be monitored in the monthly inspections

If the inspection shows a safety device (see Standard 1415 for a list of required safety devices) is not working properly, the equipment must not be used. If it shows an operational aid (see Standard 1416 for a list of required operational aids) is not working properly, the equipment may be used for a limited period (7 or 30 calendar days depending on the type of operational aid) as long as specified temporary alternative precautions are taken. For the other items covered by the inspection, if the inspector finds any deficiency in an item, he/she must

Copyright © 2022 Geigle Safety Group, Inc.

determine if the deficiency is serious enough to be a safety hazard. If so, the equipment must not be used until the deficiency is corrected. Shift inspections need not be documented.

Tower Crane Pre-Shift Inspection

Monthly Inspections

The monthly inspection is the same as a shift inspection for most equipment. For tower cranes, the following additional items must be inspected (Standard 1435(f)(4)):

- tower (mast) bolts and other structural bolts (for loose or dislodged condition) from the base of the tower crane up or, if the crane is tied to or braced by the structure, those above the uppermost brace support
- uppermost tie-in, braces, floor supports and floor wedges where the tower crane is supported by the structure, for loose or dislodged components

Documentation of Monthly Inspection

The following information must be documented and maintained for a minimum of three months by the employer that conducts the inspection.

- items checked and the results of the inspection
- the name and signature of the person who conducted the inspection and the date

Annual/Comprehensive Inspections

The annual inspection must be conducted by a qualified person and is far more thorough than a shift or monthly inspection. In addition to those items that must be checked during a shift inspection, the annual inspection must include:

- equipment structure (including the boom and, if equipped, the jib) as follows:
  - structural members (deformed, cracked, or significantly corroded)
  - bolts, rivets, and other fasteners: loose, failed, or significantly corroded
  - welds for cracks
- sheaves and drums for cracks or significant wear
- parts such as pins, bearings, shafts, gears, rollers and locking devices for distortion, cracks, or significant wear

Copyright © 2022 Geigle Safety Group, Inc.

- brake and clutch system parts, linings, pawls, and ratchets for excessive wear
- safety devices and operational aids for proper operation (including significant inaccuracies)
- gasoline, diesel, electric, or other power plants for safety-related problems (such as leaking exhaust and emergency shutdown feature) and conditions, and proper operation
- chains and chain drive sprockets for excessive wear of sprockets and excessive chain stretch
- travel steering, brakes, and locking devices, for proper operation
- tires for damage or excessive wear
- hydraulic, pneumatic and other pressurized hoses, fittings, and tubing, as follows:
    - flexible hose or its junction with the fittings for indications of leaks
    - threaded or clamped joints for leaks
    - outer covering of the hose for blistering, abnormal deformation, or other signs of failure/impending failure
    - outer surface of the hose, rigid tube, or fitting for indications of excessive abrasion or scrubbing
- hydraulic and pneumatic pumps and motors, as follows:
    - performance indicators (unusual noises or vibration, low operating speed, excessive heating of the fluid, low pressure)
    - loose bolts or fasteners
    - shaft seals and joints between pump sections for leaks
- hydraulic and pneumatic valves, as follows:
    - spools (sticking, improper return to neutral, and leaks)
    - leaks
    - valve housing cracks

Copyright © 2022 Geigle Safety Group, Inc.

  - relief valves (failure to reach correct pressure - if there is a manufacturer procedure for checking pressure, it must be followed)

- hydraulic and pneumatic cylinders, as follows:
  - drifting caused by fluid leaking across the piston
  - rod seals and welded joints for leaks
  - cylinder rods for scores, nicks, or dents
  - case (barrel) for significant dents
  - rod eyes and connecting joints (loose or deformed)
- outrigger or stabilizer pads/floats for excessive wear or cracks;
- slider pads for excessive wear or cracks
- electrical components and wiring for cracked or split insulation and loose or corroded terminations;
- warning labels and decals originally supplied with the equipment by the manufacturer or otherwise required under this standard (missing or unreadable);

The outrigger and stabilizer pads should be checked during an annual inspection for excessive wear or cracks during an annual inspection?

- originally equipped operator seat or equivalent (missing);
- operator seat (unserviceable);
- originally equipped steps, ladders, handrails, or guards (missing);
- steps, ladders, handrails, or guards (in unusable/unsafe condition);
- for tower cranes, all turntable and tower bolts must be inspected for proper condition and torque (Standard 1435(f)); and
- for derricks, gudgeon pins for cracks, wear, and distortion, and foundation supports for continued ability to sustain the imposed loads (Standard 1436(p)) .

Copyright © 2022 Geigle Safety Group, Inc.

If necessary, disassembly is required to complete the annual inspection. Also, the inspection must include functional testing to determine that the equipment as configured in the inspection is functioning properly.

Sample Annual Tower Crane Checklist

Corrective Actions

If a qualified person who conducts an inspection identifies any deficiency in any of the items inspected and determines the deficiency constitutes a safety hazard, the equipment must be taken out of service until the deficiency is corrected. (See the discussion above under shift inspections for the corrective action required if an operational aid is not working properly). If a qualified person determines, even though not presently a safety hazard, the deficiency needs to be monitored, the employer must ensure the deficiency is checked in the monthly inspections.

Documentation

The following information must be documented, maintained, and retained for a minimum of 12 months, by the employer that conducts the inspection:

- items checked and the results of the inspection
- name and signature of the person who conducted the inspection and the date

Post-Assembly Inspections

Before the equipment can be used, it must be inspected by a qualified person to ensure it is configured in accord with manufacturer equipment criteria. The qualified person may be the A/D director. Where manufacturer equipment criteria are unavailable, a qualified person must:

- Determine if a registered professional engineer (RPE) familiar with the type of equipment involved is needed to develop criteria for the equipment configuration (If an RPE is not needed, the employer must ensure the criteria are developed by a qualified person; if an RPE is needed, the employer must ensure they are developed by an RPE).
- Determine if the equipment meets these criteria before the equipment is used.

Copyright © 2022 Geigle Safety Group, Inc.

Pre-and Post-Erection Inspection of Tower Cranes

Tower crane components must be inspected for damage or excessive wear by a qualified person before being erected. The qualified person must pay particular attention to components difficult to inspect thoroughly during shift inspections.

If a qualified person determines a component is damaged or worn to the extent it would create a safety hazard if used on the crane, the component must not be erected on the crane. If the damaged or worn component is repaired and, upon re-inspection by a qualified person, is no longer a safety hazard, the component may be erected on the crane. If the qualified person determines, though not presently a safety hazard, the component needs to be monitored, the employer must ensure the component is checked in the monthly inspections. Any such determination must be documented, and the documentation must be available to any individual who conducts a monthly inspection.

In addition to the other requirements listed above for post-assembly inspections, the following requirements must be met:

- A load test using certified weights, or scaled weights using a certified scale with a current certificate of calibration, must be conducted after each erection.
- A load test must be conducted in accord with the manufacturer's instructions when available. Where these instructions are unavailable, the test must be conducted in accord with written load test procedures developed by a registered professional engineer familiar with the type of equipment involved.

Severe Service Inspections

Where the severity of use/conditions is such that there is a reasonable probability of damage or excessive wear (such as loading that may exceed rated capacity, shock loading exceeding the rated capacity, or prolonged exposure to a corrosive atmosphere), the employer must stop using the equipment and a qualified person must:

- Inspect the equipment for structural damage to determine if the equipment can continue to be used safely.
- Determine if any items/conditions must be inspected during an annual inspection (if so, a qualified person must inspect those items/conditions).

Copyright © 2022 Geigle Safety Group, Inc.

Inspection of Non-Regular Equipment

Equipment which has been idle for **three** months or more must be inspected by a qualified person in accord with the requirements for monthly inspections before being used.

Inspection of Modified Equipment

Equipment with modifications or additions which affect the safe operation of the equipment (such as a safety device or operational aid, critical part of a control system, power plant, braking system, load-sustaining structural components, load hook, or in-use operating mechanism) or capacity must be inspected by a qualified person, prior to initial use.

Note: Under Standard 1434, any such modification/addition must be approved by either the manufacturer or a registered professional engineer. The inspection must assure the modifications or additions have been made in accord with the approval and must include functional testing of the equipment.

Inspection of Repaired/Adjusted Equipment

Equipment with a **repair or adjustment** to ensure safe operation (adjustment to a safety device or operator aid, critical part of a control system, power plant, braking system, load-sustaining structural components, load hook, or in-use operating mechanism) must be inspected by a qualified person, prior to initial use.

A qualified person must determine if the repair/adjustment meets manufacturer equipment criteria (where applicable and available). Where manufacturer equipment criteria are unavailable or inapplicable, a qualified person must determine if a registered professional engineer (RPE) is needed to develop criteria for the repair/adjustment.

If an RPE is not needed, the employer must ensure the criteria is developed by a qualified person. If an RPE is needed, the employer must ensure criteria is developed by the RPE. The inspection must determine if the repair/adjustment meets the criteria developed by the RPE or qualified person and must include functional testing.

Copyright © 2022 Geigle Safety Group, Inc.

Module 5 Quiz

Use this quiz to self-check your understanding of the module content. You can also go online and take this quiz within the module. The online quiz provides the correct answer once submitted.

1. **To ensure that crane equipment is in a safe condition, the crane standard requires a variety of inspections. Which of the following inspections is NOT required of all equipment?**

   a. monthly inspections
   b. annual inspections
   c. shift inspections
   d. random inspections

2. **If a qualified person identifies any deficiency in any of the items inspected and determines that the deficiency constitutes a safety hazard, the equipment must be _____.**

   a. monitored during monthly inspections
   b. taken out of service until the deficiency is corrected
   c. returned to the manufacturer for servicing
   d. documented and tagged while in use

3. **A qualified person must inspect tower crane components for _____ before being erected.**

   a. damage or excessive wear
   b. torn or worn fabric
   c. proper signage
   d. adequate visibility

4. **The employer must stop using crane equipment when which of the following conditions exist?**

   a. reasonable probability of damage
   b. reasonable probability of excessive wear
   c. prolonged exposure to corrosive atmosphere
   d. when any of the above conditions exist

Copyright © 2022 Geigle Safety Group, Inc.

5. **If you have crane equipment that has been repaired or adjusted to ensure safe operation it must be inspected by a _____ prior to initial use.**

   a. qualified person
   b. competent person
   c. designated person
   d. authorized person

Copyright © 2022 Geigle Safety Group, Inc.

Module 6: Wire Rope Inspection, Selection, and Installation

Wire rope must be inspected as part of the shift, monthly, and annual inspections required by Standard 1412. The shift and monthly inspections must evaluate all visible rope during the shift in which the inspection is conducted. The annual inspection must include the entire length of the rope.

The shift and monthly inspections must pay particular attention to the following:

- rotation resistant wire rope in use
- wire rope being used for boom hoists and luffing hoists, particularly at reverse bends
- wire rope at flange points, crossover points, and repetitive pickup points on drums
- wire rope at or near terminal ends
- wire rope in contact with saddles, equalizer sheaves, or other sheaves where rope travel is limited

In addition to these items, the annual inspection must include:

- those sections normally hidden during shift and monthly inspections
- wire rope subject to reverse bends
- wire rope passing over sheaves

You must take certain action if an inspection reveals a defect in the rope. Some defects require either the rope be removed from service or the damaged section be severed. For others, the inspector must evaluate whether the defect constitutes a safety hazard, with the corrective action depending on the outcome of the evaluation.

Note: If a wire rope must be repaired or replaced, either the equipment (as a whole) or the hoist with that wire rope must be tagged-out during the repair/replacement process.

Severing Wire Rope

Where severing the rope is permitted, the damaged section must be discarded. Two undamaged sections may not be spliced to make a longer rope. If the remaining undamaged section is too short for the drum to have two full wraps of rope when the load and/or boom is in its lowest position, the rope cannot be used and must be replaced.

Copyright © 2022 Geigle Safety Group, Inc.

Electrical Contact with Power Lines

Wire rope that has made electrical contact with a power line (either by the rope, the equipment or the load contacting the line) must be immediately removed from service, even if no damage is visible. The rope may have suffered internal damage which cannot be repaired.

Defects Requiring Removal From Service or Severing

The following defects require the rope to either be removed from service or the defective part severed.

- visible broken wires, as follows:
    - running wire ropes: six randomly distributed broken wires in one rope lay, or three broken wires in one strand in one rope lay, where a rope lay is the length along the rope in which one strand makes a complete revolution around the rope

    - rotation resistant ropes: two randomly distributed broken wires in six rope diameters, or four randomly distributed broken wires in 30 rope diameters
    - pendants or standing wire ropes: more than two broken wires in one rope lay located in rope beyond end connections, or more than one broken wire in a rope lay located at an end connection
- a diameter reduction of more than 5% from nominal diameter
- in rotation resistant wire rope, core protrusion or other distortion indicating core failure
- a broken strand

Exception: If the wire rope manufacturer has approved different criteria for visible broken wires or diameter reduction, you may follow those criteria instead of those above.

Copyright © 2022 Geigle Safety Group, Inc.

Defects Requiring Evaluation

A wire rope must be evaluated when significant distortion, such as birdcaging, is visible.

The following defects must be evaluated by the inspector to determine whether they constitute a safety hazard:

- significant distortion of the wire rope structure such as kinking, crushing, unstranding, birdcaging, signs of core failure, or steel core protrusion between the outer strands
- significant corrosion
- electric arc damage (from a source other than power lines) or heat damage
- improperly applied end connections
- significantly corroded, cracked, bent, or worn end connections (such as from severe service)

If these defects are found to be hazardous, the rope must be removed from service or the defective part severed.

If they are not found to be an immediate hazard, you may continue to use the rope. However, if such a defect is identified during an annual inspection, you must check it during each monthly inspection. This may require a more complete monthly inspection than would otherwise be required because the annual inspection must cover the entire rope and may reveal a defect in a part of the rope that would not normally be visible during a shift or monthly inspection.

Copyright © 2022 Geigle Safety Group, Inc.

Selection and Installation Criteria

OSHA 1926.1414 requires wire rope be used in accordance with the recommendations of the wire rope manufacturer, the equipment manufacturer, or a qualified person. It establishes a classification system for rotation resistant rope and specifies design factors for the different classes of such rope.

Wire rope is classified as either "standard rope" or "rotation resistant rope." Rotation resistant rope, in turn, can be constructed in various ways, and the standard lists three different "types" that vary in their construction.

Type I rotation resistant wire rope: This type of wire rope is constructed to have little or no tendency to rotate or, if guided, transmits little or no torque. It has at least 15 outer strands and comprises an assembly of at least three layers of strands laid helically over a center in two operations. The direction of lay of the outer strands is opposite to that of the underlying layer.

Type II rotation resistant wire rope: This type of wire rope constructed to have significant resistance to rotation. It has at least ten outer strands and comprises an assembly of two or more layers of strands laid helically over a center in two or three operations. The direction of lay of the outer strands is opposite to that of the underlying layer.

Type III rotation resistant wire rope: This type of wire rope is constructed to have limited resistance to rotation. It has no more than nine outer strands and comprises an assembly of two layers of strands laid helically over a center in two operations. The direction of lay of the outer strands is opposite to that of the underlying layer.

For all three types of rotation resistant ropes, internal design resists twisting better than standard rope. Rotation resistant rope, therefore, enables better control of the load because it tends to keep the load from rotating while it is being hoisted or suspended. However, the design of rotation resistant rope makes it more susceptible to internal damage than standard rope, and such internal damage can be hard to detect. Because of the chance of hidden damage, this section restricts the use of rotation resistant rope for boom hoist reeving and duty cycle/repetitive lifts.

Boom Hoist Reeving

Rotation resistant rope may only be used for boom hoist reeving when load hoists are used as boom hoists for attachments such as luffing attachments or boom and mast attachment systems. When you use rotation resistant rope for such a purpose, you must comply with conditions specified below.

Copyright © 2022 Geigle Safety Group, Inc.

1926.1414(e)(4)(ii)Rotation resistant ropes may be used as boom hoist reeving when load hoists are used as boom hoists for attachments such as luffing attachments or boom and mast attachment systems. Under these conditions, all of the following requirements must be met:

1926.1414(e)(4)(ii)(A) The drum must provide a first layer rope pitch diameter of not less than 18 times the nominal diameter of the rope used.

1926.1414(e)(4)(ii)(B) The requirements in § 1926.1426(a) (irrespective of the date of manufacture of the equipment), and § 1926.1426(b).

1926.1414(e)(4)(ii)(C) The requirements in ASME B30.5-2004 sections 5-1.3.2(a), (a)(2) through (a)(4), (b) and (d) (incorporated by reference, see § 1926.6) except that the minimum pitch diameter for sheaves used in multiple rope reeving is 18 times the nominal diameter of the rope used (instead of the value of 16 specified in section 5-1.3.2(d)).

1926.1414(e)(4)(ii)(D) All sheaves used in the boom hoist reeving system must have a rope pitch diameter of not less than 18 times the nominal diameter of the rope used.

1926.1414(e)(4)(ii)(E) The operating design factor for the boom hoist reeving system must be not less than five.

1926.1414(e)(4)(ii)(F) The operating design factor for these ropes must be the total minimum breaking force of all parts of rope in the system divided by the load imposed on the rope system when supporting the static weights of the structure and the load within the equipment's rated capacity.

1926.1414(e)(4)(ii)(G) When provided, a power-controlled lowering system must be capable of handling rated capacities and speeds as specified by the manufacturer.

Duty Cycle/Repetitive Lifts

You must meet certain criteria when using rotation resistant rope for duty cycle and repetitive lifts. These are defined as follows:

Duty Cycle: A type of crane service in which bulk material is transferred from one point to another by rapidly lifting, swinging, booming, and placing the material. Typical types of duty cycle service are dragline, clamshell, grapple, and magnet. This type of service is differentiated from standard crane "lift service" in that cycle times are very short and continuous. Cycle times are often less than one minute per load, and loads are lifted and placed in general areas rather than precise positions to permit such rapid cycles.

Repetitive lifts: A continuous operation with loads that may vary in size and weight.

Copyright © 2022 Geigle Safety Group, Inc.

The requirements for using rotation resistant rope for duty cycle and repetitive lifts vary with the type of rotation resistant rope being used and the operating design factor of the rope. If you are using rotation resistant rope for one of these purposes, check the standard for the criteria that apply to the type of rope you are using.

OSHA 1926.1414 also contains the following requirements:

- Wire rope clips used in conjunction with wedge sockets must be attached to the unloaded dead end of the rope only; except that the use of devices specifically designed for dead-ending rope in a wedge socket is permitted.
- Socketing must be done in the manner specified by the manufacturer of the wire rope or fitting.
- Prior to cutting a wire rope, seizings must be placed on each side of the point to be cut. The length and number of seizings must be in accord with the wire rope manufacturer's instructions.

Safety Devices and Operational Aids

While repairing an operational aid, if a necessary part is ordered in a timely manner, but is not received within the 7 to 30-day period, is additional time permitted?

These sections require cranes/derricks be equipped with certain types of safety equipment: Safety devices and operational aids. Safety devices and operational aids must not be used as a substitute for the exercise of professional judgment by the operator.

Safety Devices

Safety devices must be in proper working order for the equipment to be permitted to operate. The following safety devices are required on all equipment unless otherwise specified:

- **crane level indicator** (except on portal cranes, derricks, floating cranes/derricks and land cranes/derricks on barges, pontoons, vessels or other means of flotation),
- **boom stops** (except for derricks and hydraulic booms),
- **jib stops** (if a jib is attached), except for derricks,
- **locks** on foot pedal brakes,

Copyright © 2022 Geigle Safety Group, Inc.

- **integral holding device/check valve** on hydraulic outrigger jacks and hydraulic stabilizer jacks,
- **rail clamps and rail stops** for equipment on rails (except portal cranes), and
- **horn** (both built into or on the equipment and immediately available to the operator).

Safety Devices

OSHA 1926.1415 requires cranes/derricks be equipped with certain types of safety devices. Safety devices must be in proper working order for the equipment to be permitted to operate. The following safety devices are required on all equipment unless otherwise specified:

- crane level indicator (except on portal cranes, derricks, floating cranes/derricks and land cranes/derricks on barges, pontoons, vessels or other means of flotation),
- boom stops (except for derricks and hydraulic booms),
- jib stops (if a jib is attached), except for derricks,
- locks on foot pedal brakes,
- integral holding device/check valve on hydraulic outrigger jacks and hydraulic stabilizer jacks,
- rail clamps and rail stops for equipment on rails (except portal cranes), and
- horn (both built into or on the equipment and immediately available to the operator).

Operational Aids

If an operational aid is not working properly, the equipment may still be operated for a limited time as long as certain alternative precautions are taken. These are divided into two categories that differ in the amount of time the equipment may operate before they are repaired.

Category I aids must be repaired within seven calendar days after a deficiency occurs while equipment may operate for 30 calendar days before a Category II aid is repaired. In both cases, additional time is permitted if, a necessary part is ordered in a timely manner but is not received within the 7- or 30-day period.

Copyright © 2022 Geigle Safety Group, Inc.

Certain operational aids are only required on equipment manufactured after a specified date. In some cases, these are past dates that reflect when these devices began to be installed on equipment. In other cases, they are future dates that are intended to give manufacturers time to install the devices on new equipment.

Category I Operational Aids

- **boom hoist limiting device** (required on equipment manufactured after December 16, 1969),
- **luffing jib limiting device,**
- **automatic anti two-blocking device** (required on telescopic boom cranes manufactured after February 28, 1992; lattice boom cranes manufactured after November 8, 2011; derricks manufactured after November 8, 2011; articulating cranes equipped with a load hoist manufactured after December 31, 1999; digger derricks manufactured after November 8, 2011), and
- **automatic or warning-type anti two-blocking device** (required on lattice boom cranes manufactured after February 28, 1992 and before November 8, 2011).

Note: Two-block protection is not required for lattice boom equipment used for dragline, clamshell (grapple), magnet, drop ball, container handling, concrete bucket, marine operations that do not involve hoisting personnel, and pile driving work.

Category II Operational Aids

- **boom angle or radius indicator** (required on all equipment, except digger derricks manufactured before November 9, 2010),
- **jib angle indicator** if the equipment has a luffing jib,
- **boom length indicator if the equipment has a telescopic boom** (unless the rated capacity is independent of the boom length),
- **load weighing and similar devices** (required on equipment (other than derricks, articulating cranes, and digger derricks manufactured before November 8, 2011) manufactured after March 29, 2003 with a rated capacity more than 6,000 pounds),

Copyright © 2022 Geigle Safety Group, Inc.

- **automatic overload prevention device, load weighing device, load moment (or rated capacity) indicator, or load moment (rated capacity) limiter** (required on articulating cranes manufactured after November 8, 2011),

- **outrigger/stabilizer position (horizontal beam extension) sensor/monitor** if the equipment has outriggers or stabilizers (required on equipment manufactured after November 8, 2011), and

- **hoist drum rotation indicator** if the equipment has a hoist drum not visible from the operator's station (required on equipment manufactured after November 8, 2011).

- **Note: Articulating cranes need not be equipped with boom angle or radius indicators, jib angle indicators, or boom length indicators.**

- Category I Operational Aids

- **boom hoist limiting device** (required on equipment manufactured after December 16, 1969),

- **luffing jib limiting device,**

- **automatic anti two-blocking device** (required on telescopic boom cranes manufactured after February 28, 1992; lattice boom cranes manufactured after November 8, 2011; derricks manufactured after November 8, 2011; articulating cranes equipped with a load hoist manufactured after December 31, 1999; digger derricks manufactured after November 8, 2011), and

- **automatic or warning-type anti two-blocking device** (required on lattice boom cranes manufactured after February 28, 1992 and before November 8, 2011).

Note: Two-block protection is not required for lattice boom equipment used for dragline, clamshell (grapple), magnet, drop ball, container handling, concrete bucket, marine operations that do not involve hoisting personnel, and pile driving work.

Category II Operational Aids

- **boom angle or radius indicator** (required on all equipment, except digger derricks manufactured before November 9, 2010),

- **jib angle indicator** if the equipment has a luffing jib,

Copyright © 2022 Geigle Safety Group, Inc.

- **boom length indicator if the equipment has a telescopic boom** (unless the rated capacity is independent of the boom length),

- **load weighing and similar devices** (required on equipment (other than derricks, articulating cranes, and digger derricks manufactured before November 8, 2011) manufactured after March 29, 2003 with a rated capacity more than 6,000 pounds),

- **automatic overload prevention device, load weighing device, load moment (or rated capacity) indicator, or load moment (rated capacity) limiter** (required on articulating cranes manufactured after November 8, 2011),

- **outrigger/stabilizer position (horizontal beam extension) sensor/monitor** if the equipment has outriggers or stabilizers (required on equipment manufactured after November 8, 2011), and

- **hoist drum rotation indicator** if the equipment has a hoist drum not visible from the operator's station (required on equipment manufactured after November 8, 2011).

Note: Articulating cranes need not be equipped with boom angle or radius indicators, jib angle indicators, or boom length indicators.

Copyright © 2022 Geigle Safety Group, Inc.

Module 6 Quiz

Use this quiz to self-check your understanding of the module content. You can also go online and take this quiz within the module. The online quiz provides the correct answer once submitted.

1. **While conducting shift and monthly inspections you must evaluate all rope that is _____.**

   a. defective
   b. visible
   c. assigned
   d. recognized

2. **If a wire rope must be repaired or replaced, either the equipment (as a whole) or the hoist with that wire rope must be _____ during the repair/replacement process.**

   a. removed from service
   b. disposed of
   c. locked-out
   d. tagged-out

3. **Wire rope that has made electrical contact with a power line (either by the rope, the equipment or the load contacting the line) must be immediately _____.**

   a. inspected to see if there is any visible damage
   b. inspected to determine whether it needs to be removed from service
   c. removed from service even if no damage is visible
   d. removed from service only if damage is visible

4. **Which of the following defects must be evaluated by the inspector to determine whether they constitute a safety hazard?**

   a. insignificant distortion
   b. significant corrosion
   c. frigid temperatures icing the wire
   d. insignificant expansion due to high temperature at the work site

Copyright © 2022 Geigle Safety Group, Inc.

5. **If wire rope defects are found through evaluation to be _____, the rope must be removed from service or the defective part severed.**

   a. hazardous
   b. non-hazardous
   c. semi-hazardous
   d. partially hazardous

Copyright © 2022 Geigle Safety Group, Inc.

Glossary

Most of these definitions are in the 1926.1401 standard. A few other key terms have been added to this list to assist with clarification.

Assembly/Disassembly - The assembly and/or disassembly of equipment covered under this standard. With regard to tower cranes, ‘‘erecting and climbing’’ replaces the term ‘‘assembly,’’ and ‘‘dismantling’’ replaces the term ‘‘disassembly.’’ Regardless of whether the crane is initially erected to its full height or is climbed in stages, the process of increasing the height of the crane is an erection process.

A/D director (Assembly/Disassembly director) - An individual who meets this subpart’s requirements for an A/D director, irrespective of the person’s formal job title or whether the person is non-management or management personnel.

Assembly/Disassembly Supervisor (“A/D Supervisor”) - An individual who meets this Section's requirements for an A/D supervisor, irrespective of the person's formal job title or whether the person is non-management or management personnel.

Attachments - Any device that expands the range of tasks that can be done by the equipment. Examples include, but are not limited to: an auger, drill, magnet, pile-driver, and boom-attached personnel platform.

Audible signal - A signal made by a distinct sound or series of sounds. Examples include, but are not limited to, sounds made by a bell, horn, or whistle.

Bird Caging - The twisting of fiber or wire rope in an isolated area in the opposite direction of the rope lay, thereby causing it to take on the appearance of a bird cage.

Blocking (also referred to as ‘‘cribbing’’) - Wood or other material used to support equipment or component(s) and distribute loads to the ground. It is typically used to support lattice boom sections during assembly/disassembly and under outrigger and stabilizer floats.

Boatswain's Chair - A single-point adjustable suspension scaffold consisting of a seat or sling (which may be incorporated into a full body harness) designed to support one employee in a sitting position.

Bogie - ‘‘Travel bogie,’’ which is defined below.

Boom (equipment other than tower crane) - An inclined spar, strut, or other structural member that supports the upper hoisting tackle on a crane or derrick. Typically, the length and vertical angle of the boom can be varied to achieve increased height or height and reach when lifting

Copyright © 2022 Geigle Safety Group, Inc.

loads. Booms can usually be grouped into general categories of hydraulically extendible, cantilevered type, latticed section, cable supported type or articulating type.

Boom - If the “boom” (i.e., principle horizontal structure) is fixed, it is referred to as a jib; if it is moveable up and down, it is referred to as a boom.

Boom Angle Indicator - A device that measures the angle of the boom relative to horizontal.

Boom Hoist Limiting Device - A device that disengages boom hoist power when the boom reaches a predetermined operating angle. It also sets brakes or closes valves to prevent the boom from lowering after power is disengaged. This includes boom hoist disengaging devices, boom hoist shut-off, boom hoist disconnects, boom hoist hydraulic reliefs, boom hoist kick-outs, automatic boom stop devices, or derricking limiters.

Boom Length Indicator - The length of the permanent part of the boom (such as ruled markings on the boom) or, as in some computerized systems, the length of the boom with extensions/attachments.

Boom Stop - A device that restricts the boom from moving a certain maximum angle and toppling over backward (this includes boom stops, belly straps with struts/standoff, telescoping boom stops, attachment boom stops, and backstops).

Boom Suspension Systems - A system of pendants, running ropes, sheaves, and other hardware which supports the boom tip and controls the boom angle.

Builder - The builder/constructor of equipment.

Center of Gravity - The point in an object around which its weight is evenly distributed, such that if a support is placed under that point, the object could balance on the support.

Certified welder - A welder who meets nationally recognized certification requirements applicable to the task being performed.

Certified Welder - A welder who meets certification requirements applicable to the task being performed, in accordance with the American Welding Society or the American Society of Mechanical Engineers.

Climbing - The process in which a tower crane is raised to a new working height, either by adding additional tower sections to the top of the crane (top climbing), or by a system in which the entire crane is raised inside the structure (inside climbing).

Come-A-Long - A mechanical device typically consisting of a chain or cable attached at each end that is use to facilitate movement of materials through leverage.

Copyright © 2022 Geigle Safety Group, Inc.

Competent Person - A person who is capable of identifying existing and predictable hazards in the surroundings or working conditions which are unsanitary, hazardous, or dangerous to employees, and who has authorization from his employer to take prompt corrective measures to eliminate them.

Controlled Load Lowering - Lowering a load by means of a mechanical hoist drum device that allows a hoisted load to be lowered with maximum control using the gear train or hydraulic components of the hoist mechanism. Controlled load lowering requires the use of the hoist drive motor, rather than the load hoist brake, to lower the load.

Controlling Entity - A prime contractor, general contractor, construction manager or any other legal entity which has the overall responsibility for the construction of the projects, including its planning, quality and completion.

Counterweight - A weight used to supplement the weight of equipment in providing stability for lifting loads by counterbalancing those loads.

Crane Level Indicator - A device for determining true horizontal.

Crane, Articulating - A crane whose boom consists of a series of folding, pin-connected structural members, typically manipulated to extend or retract by power from hydraulic cylinders.

Crane, Assist - A crane used to assist in assembling or disassembling a crane.

Crane, Crawler - Equipment that has a type of base mounting which incorporates a continuous belt of sprocket driven track.

Crane, Floating (or Floating Derrick) - Equipment designed by the manufacturer (or employer) for marine use by permanent attachment to a barge, pontoons, vessel or other means of flotation.

Crane, Land (or Land Derrick) - Equipment not originally designed by the manufacturer for marine use by permanent attachment to barges, pontoons, vessels, or other means of flotation.

Crane, Locomotive - A crane mounted on a base or car equipped for travel on a railroad track.

Crane, Mobile - A lifting device incorporating a cable suspended latticed boom or hydraulic telescopic boom designed to be moved between operating locations by transport over the road. These are referred to in Europe as a crane mounted on a truck carrier.

Copyright © 2022 Geigle Safety Group, Inc.

Crane, Overhead and Gantry - Includes overhead/bridge cranes, semigantry, cantilever gantry, wall cranes, storage bridge cranes, launching gantry cranes, and similar equipment, irrespective of whether it travels on tracks, wheels or other means.

Crane, Portal - A type of crane consisting of a rotating upperstructure, hoist machinery, and boom mounted on top of a structural gantry which may be fixed in one location or have travel capability. The gantry legs or columns usually have portal openings in between to allow passage of traffic beneath the gantry.

Crane, Side-Boom - A track-type or wheel-type tractor having a boom mounted on the side of the tractor, used for lifting, lowering, or transporting a load suspended on the load hook. The boom or hook can be lifted or lowered in a vertical direction only.

Crane, Tower - A type of lifting structure that utilizes a vertical mast or tower to support a working boom (jib) suspended from the working boom. While the working boom may be fixed horizontally or have luffing capability, it can always rotate about the tower center to swing loads. The tower base may be fixed in one location or ballasted and moveable between locations.

Critical lift - A crane lifting operation involving an exceptional level of risk due to factors such as load weight, lifting height, procedural complications, or proximity to situational hazards. Critical lifts are often identified by conditions exceeding a specified percentage of the crane's rated capacity (75%); however, any more complex issues may be involved.

Crossover Points - The locations on a wire rope which is spooled on a drum where one layer of rope climbs up on and crosses over the previous layer. This takes place at each flange of the drum as the rope is spooled on the drum, reaches the flange, and begins to wrap back in the opposite direction.

Dedicated Channel - A line of communication assigned by the employer who controls the communication system to only one signal person and crane/derrick or to a coordinated group of cranes/derricks/signal person(s).

Dedicated Pile-Driver - A machine that is designed to function exclusively as a pile-driver. These machines typically can both hoist the material that will be pile-driven and pile-drive the material.

Dedicated Spotter (power lines) - A person who meets the requirements of Standard 1926.1428 (signal person qualifications) and whose sole responsibility is to watch the separation between the power line and the equipment, the load line and the load (including rigging and lifting

Copyright © 2022 Geigle Safety Group, Inc.

accessories), and ensure through communication with the operator that the applicable minimum approach distance is not breached.

Directly Under the Load - A part or all of an employee is directly beneath the load.

Drum Rotation Indicator - A device on a crane or hoist which indicates in which direction and at what relative speed a particular hoist drum is turning.

Electrical Contact - When a person, object, or equipment makes contact or comes in close proximity with an energized conductor or equipment that allows the passage of current.

Employer-Made Equipment - Equipment designed and built by an employer for its own use.

Encroachment - When any part of the crane, load line or load (including rigging and lifting accessories) breaches a minimum clearance distance that this Section requires to be maintained from a power line.

Equipment Criteria - Instructions, recommendations, limitations and specifications.

Fall Protection Equipment - Guardrail systems, safety net systems, personal fall arrest systems, positioning device systems or fall restraint systems.

Fall Restraint System - A fall protection system that prevents the user from falling any distance. The system is comprised of either a body belt or body harness, along with an anchorage, connectors and other necessary equipment. The other components typically include a lanyard and may also include a lifeline and other devices.

Fall zone - The area (including but not limited to the area directly beneath the load) in which it is reasonably foreseeable that partially or completely suspended materials could fall in the event of an accident.

Fall Zone - The area (including the area directly beneath the load) in which it is reasonably foreseeable that partially or completely suspended materials could fall in the event of an accident.

Flange Points - A point of contact between rope and drum flange where the rope changes layers.

Free Fall (of the load line) - When only the brake is used to regulate the descent of the load line (the drive mechanism is not used to drive the load down faster or retard its lowering).

Free Surface Effect - Uncontrolled transverse movement of liquids in compartments that reduce a vessel's transverse stability.

Copyright © 2022 Geigle Safety Group, Inc.

Functional testing - The testing of a crane, typically done with a light load or no load, to verify the proper operation of a crane's primary function, i.e. hoisting, braking, booming, swinging, etc. A functional test is contrasted to testing the crane's structural integrity with heavy loads.

Hoist - A mechanical device for lifting and lowering loads by winding rope onto or off of a drum.

Hoisting - The act of raising, lowering or otherwise moving a load in the air with equipment covered by this Section. As used in this Section, “hoisting” can be done by means other than wire rope/hoist drum equipment.

Insulating Link/Device - An insulating device approved by a Nationally Recognized Testing Laboratory, as that term is defined in 29 CFR 1910.7(b).

Jib Stop (a.k.a. Jib Backstop) - Is similar to a boom stop but is for a fixed or luffing jib.

List - The angle of inclination about the longitudinal axis of a barge, pontoons, vessel or other means of flotation.

Load - The weight of the object being lifted or lowered, including the weight of the load-attaching equipment such as the load block, ropes, slings, shackles, and any other ancillary attachment.

Load Moment Indicator (also referred to as Rated Capacity Indicator) - A system which aids the equipment operator by sensing the overturning moment on the equipment (i.e., load X radius). It compares this lifting condition to the equipment's rated capacity, and indicates to the operator the percentage of capacity at which the equipment is working. Lights, bells, or buzzers may be incorporated as a warning of an approaching overload condition.

Load Moment Limiter (also referred to as Rated Capacity Limiter) - A system which aids the equipment operator by sensing the overturning moment on the equipment (i.e., load X radius). It compares this lifting condition to the equipment's rated capacity, and when the rated capacity is reached, it shuts off power to those equipment functions which can increase the severity of loading on the equipment (e.g., hoisting, telescoping out, or luffing out). Typically, those functions which decrease the severity of loading on the equipment remain operational (e.g., lowering, telescoping in, or luffing in).

Luffing Jib Limiting Device - Is similar to a boom hoist limiting device, except that it limits the movement of the luffing jib.

Marine Hoisted Personnel Transfer Device - A device, such as a “transfer net,” that is designed to protect the employees being hoisted during a marine transfer and to facilitate rapid entry

Copyright © 2022 Geigle Safety Group, Inc.

into and exit from the device. Such devices do not include boatswain's chairs when hoisted by equipment covered by this Section.

Marine Worksite - A construction worksite located in, on or above the water.

Moving Point-To-Point - The times during which an employee is in the process of going to or from a work station.

Multi-Purpose Machine - A machine that is designed to be configured in various ways, at least one of which allows it to hoist (by means of a winch or hook) and horizontally move a suspended load. For example, a machine that can rotate and can be configured with removable tongs (for use as a forklift) or a winch pack, a jib with a hook at the end, or jib used in conjunction with a winch. When configured with the tongs, it is not covered with this Section. When configured with a winch pack, a jib with a hook at the end, or jib used in conjunction with a winch, it is covered under this Section.

Nationally recognized accrediting agency - An organization that, due to its independence and expertise, is widely recognized as competent to accredit testing organizations. Examples of such accrediting agencies include, but are not limited to, the National Commission for Certifying Agencies and the American National Standards Institute.

Nationally Recognized Accrediting Agencies - An organization that is accredited by the National Commission for Certifying Agencies (NCCA) or the American National Standards Institute (ANSI) to establish standards for and assess the formal activities of testing organizations applying for or continuing their accreditation.

Nonconductive - Because of the nature and condition of the materials, used, and the conditions of use (including environmental conditions and condition of the material), the object in question has the property of not becoming energized (that is, it has high dielectric properties offering a high resistance to the passage of current under the conditions of use).

Operational Aids - Devices that assist the operator in the safe operation of the crane by providing information or automatically taking control of a crane function. These include the devices listed in 13 NCAC 07F .0917, Standard 1926.1416 (“listed operational aids”).

Operational Controls - Levers, switches, pedals and other devices for controlling equipment operation.

Operator - A person who is operating the equipment.

Pendants - Includes both wire and bar types. Wire type pendants mean a fixed length of wire rope with mechanical fittings at both ends for pinning segments of wire rope together. Bar type

Copyright © 2022 Geigle Safety Group, Inc.

pendants mean that instead of a wire rope, a bar is used. Pendants are typically used in a latticed boom crane system to easily change the length of the boom suspension system without completely changing the rope on the drum when the boom length is increased or decreased.

Personal Fall Arrest System - A system used to arrest an employee in a fall from a working level. It consists of an anchorage, connectors, and a body harness and may include a lanyard, deceleration device, lifeline, or a combination of these.

Power Lines - Electrical distribution and electrical transmission lines.

Proximity Alarm - A device that provides a warning of proximity to a power line that has been approved by a Nationally Recognized Testing Laboratory, as that term is defined in 29 CFR 1910.7(b).

Qualified Evaluator (not a third party) - A person employed by the signal person's employer who has demonstrated to his employer that he/she is competent in accurately assessing whether individuals meet the Qualification Requirements in this Section for a signal person.

Qualified Evaluator (third party) - An independent entity that has demonstrated to the employer its competence to accurately assess whether individuals meet the Qualification Requirements in this Section for a signal person.

Qualified Person - A person who, by possession of a degree, certificate, or professional standing, or who by knowledge, training and experience, successfully demonstrated to their employer an ability to solve/resolve problems relating to the subject matter, the work, or a project.

Qualified Rigger - A rigger who meets the criteria for a qualified person.

Range control limit device – A device that can be set by an equipment operator to warn that the boom or jib tip is at a plane or multiple planes.

Range Control Warning Device - A device that can be set by an equipment operator to warn that the boom or jib tip is at a plane or multiple planes.

Rated Capacity - The maximum working load permitted by the manufacturer under specified working conditions. Such working conditions typically include a specific combination of factors such as equipment configuration, radii, boom length, and other parameters of use.

Repetitive Pickup Points - When an operation involves the rope being used on a single layer and being spooled repetitively over a portion of the drum.

Copyright © 2022 Geigle Safety Group, Inc.

Rotation Resistant Rope - A type of wire rope construction that reduces the tendency of a rope to rotate about its axis under load. Usually, this consists of an inner system of core strands laid in one direction covered by an outer system of strands laid in the opposite direction.

Running Wire Rope - A wire rope that moves over sheaves or drums.

Runway - A firm, level surface designed, prepared and designated as a path of travel for the weight and configuration of the crane being used to lift and travel with the crane suspended platform. An existing surface may be used as long as it meets these criteria.

Special Hazard Warnings - Warnings of site-specific hazards (for example, proximity of power lines).

Stability (flotation device) - The tendency of a barge, pontoons, vessel or other means of flotation to return to an upright position after having been inclined by an external force.

Standard Method - The hand signals established in ASME B30.3-2004 and ASME B30.5-2004.

Standing Wire Rope - A supporting wire rope which maintains a constant distance between the points of attachment to the two components connected by the wire rope.

Tagline - A rope (usually fiber) attached to a lifted load for purposes of controlling load spinning and pendular motions or used to stabilize a bucket or magnet during material handling operations.

Tender - An individual responsible for monitoring and communicating with a diver.

Tilt Up or Tilt Down Operation - Raising or lowering a load from the horizontal to vertical or vertical to horizontal.

Travel Bogie (also referred to as Bogie) - An assembly of two or more axles arranged to permit vertical wheel displacement and equalize the loading on the wheels.

Trim - The angle of inclination about the transverse axis of a barge, pontoons, vessel or other means of flotation.

Two Blocking - A condition in which a component that is uppermost on the hoist line such as the load block, hook block, overhaul ball, or similar component, comes in contact with the boom tip, fixed upper block or similar component. This binds the system, and continued application of power can cause failure of the hoist rope or other component.

Unavailable Procedures - Procedures that are no longer available from the manufacturer, or have never been available from the manufacturer.

Copyright © 2022 Geigle Safety Group, Inc.

Upperworks (also referred to as Superstructure or Upperstructure) - The revolving frame of equipment on which the engine and operating machinery are mounted along with the operator's cab. The counterweight is typically supported on the rear of the upperstructure and the boom, or another front end attachment is mounted on the front.

Wire rope – A flexible rope constructed by laying steel wires into various patterns of multi-wired strands around a core system to produce a helically wound rope.

Copyright © 2022 Geigle Safety Group, Inc.

Endnotes

1. Occupational Safety and Health Administration. (2011). Small Entity Compliance Guide for Final Rule for Cranes and Derricks in Construction. Retrieved from: https://www.osha.gov/cranes-derricks/small_entity.html

2. N.C. Department of Labor. (2010). A Guide to Cranes and Derricks. Retrieved from: www.nclabor.com/osha/etta/indguide/ig20.pdf

3. Occupational Safety and Health Administration. (2010a). 1926.CC Cranes & Derricks in Construction. Retrieved from: https://www.osha.gov/pls/oshaweb/owadisp.show_document?p_table=STANDARDS&p_id=13

4. Occupational Safety and Health Administration. (2010b). 29 CFR 1926.1401 Definitions. Retrieved from: https://www.osha.gov/pls/oshaweb/owadisp.show_document?p_table=STANDARDS&p_id=13

5. WiseGEEK. (2014). What is a Derrick Crane? Retrieved from: http://www.wisegeek.org/what-is-a-derrick-crane.htm

Copyright © 2022 Geigle Safety Group, Inc.